University of South Florida
Scholar Commons

Graduate Theses and Dissertations | Graduate School

7-2-2004

Analysis of Glass Mold to Enhance Rate of Heat Transfer

Anand Warude
University of South Florida

Follow this and additional works at: https://scholarcommons.usf.edu/etd

Part of the American Studies Commons

Scholar Commons Citation
Warude, Anand, "Analysis of Glass Mold to Enhance Rate of Heat Transfer" (2004). *Graduate Theses and Dissertations.*
https://scholarcommons.usf.edu/etd/1293

This Thesis is brought to you for free and open access by the Graduate School at Scholar Commons. It has been accepted for inclusion in Graduate Theses and Dissertations by an authorized administrator of Scholar Commons. For more information, please contact scholarcommons@usf.edu.

www.manaraa.com

Analysis of Glass Mold to Enhance Rate of Heat Transfer

by

Anand Warude

A thesis submitted in partial fulfillment
of the requirements for the degree of
Master of Science in Mechanical Engineering
Department of Mechanical Engineering
College of Engineering
University of South Florida

Major Professor: R. A. Crane, Ph.D.
Thomas Eason, Ph.D.
Glenn Besterfield, Ph.D.
S. C. Kranc, Ph.D.

Date of Approval:
July 2, 2004

Keywords: Glass Bottle, Cooling passages, Molding

© Copyright 2004, Anand Warude

المنارة للاستشارات

www.manaraa.com

DEDICATION

To my family

المنارة للاستشارات

www.manaraa.com

ACKNOWLEDGEMENTS

I wish to express my gratitude to my major professor, Dr. Roger A. Crane, for his continuous support, and guidance throughout my master's research and thesis preparation.

I would also like to express my appreciation to my committee members, Dr. Glen Besterfiled, Dr. Thomas Eason and Dr. Stanley Kranc for their comments and suggestions.

Acknowledgement is made to Anchor Glass Container Corporation for supporting this research in part.

This thesis would not have been possible without the love, encouragement and support of my parents.

المنارة للاستشارات

www.manaraa.com

TABLE OF CONTENTS

LIST OF TABLES iv

LIST OF FIGURES v

ABSTRACT ix

CHAPTER 1 INRODUCTION 1

1.1 Basic Physics 1
1.2 Glass Forming Operations 2
1.3 History of Glass Molding 4
1.4 Objective 5

CHAPTER 2 LITERATURE REVIEW 7

2.1 Patents Relating to the Air Cooling of Molds 7
2.1.1 Apparatus for Uniform Cooling of Glass Molding Machines 7
2.1.2 Method for Blow Molding and Cooling Hollow Glassware 8
2.1.3 Mold Cooling Arrangement for Use in Glassware Forming Machine 9
2.1.4 Forming Machine 11
2.1.5 Method of Cooling a Mold 12
2.1.6 Mold Cooling Arrangement for a Glassware Forming Machine 13
2.1.7 Mold Portion with Cooling Means for Use in Molding Molten Glass 14
2.1.8 System and Method for the Cooling of Hot Molds 14
2.1.9 Mold Assembly for the Glass Articles 15
2.1.10 Cooling Arrangement for a Mold of a Glassware Forming Machine of the Individual Section Type 17
2.1.11 Method of Cooling a Mold 17
2.1.12 Mold Cooling Apparatus for a Glassware Forming Machine 18
2.1.13 Apparatus and Method for Cooling a Mold 19
2.2 Liquid Cooling of Molds 20
2.2.1 Fluid Cooling of Glass Molds 21
2.2.2 Mold with Exterior Heat Conducting Elements 22
2.2.3 Blow Mold Cooling 23
2.2.4 Cooling Molds Used in Forming Glassware Containers 24

المنارة للاستشارات
www.manaraa.com

	2.2.5 Mold Cooling	25
	2.2.6 Method and Apparatus for Mold Cooling	26
2.3	Liquid Metal Cooling	28
	2.3.1 Molding Cooling System for the Manufacture of Glass Articles or Similar Materials	28
	2.3.2 Glass Forming Mold	29
2.4	Controlling Mold Temperature	30
	2.4.1 Controlling the Temperature of a Glass Mold	30
	2.4.2 Controlling the Temperature of a Mold	31
	2.4.3 Mold Arrangement for Cyclically Operating Glassware Container Manufacturing Machine with Temperature Sensing Means	32
2.5	Dead Pan Cooling	33
	2.5.1 Cooling Articles of Newly Molded Glassware	33
2.6	Neck Mold Assembly Cooling	35
	2.6.1 Glassware Molding Machine with Unitary Axis Molding	35
	2.6.2 Glass Container Forming Machine Including Neck Ring Mold Cooling	36
2.7	Interior Cooling in the Finishing Mold	36
	2.7.1 Apparatus for Forming Glass Articles with Treating Mean	36
CHAPTER 3	NARROW NECK PRESS AND BLOW PROCESS	38
3.1	Gob Delivery	38
3.2	Start of Press	39
3.3	Press Time	40
3.4	Plunger Down	40
3.5	Reheat	41
3.6	Reheat and Run	42
3.7	Final Blow and Vacuum Forming	43
3.8	Mold Open and Takeout	43
3.9	Dead Plate Time	44
CHAPTER 4	EXPERIMENTAL ANALYSIS OF AIR FLOW THROUGH COOLING HOLES OF THE MOLD	45
4.1	Experimental Setup and Procedure	46
4.2	Observations	48
4.3	Calculations	49
4.4	Results and Conclusions	52
CHAPTER 5	ONE DIMENSIONAL STEADY STATE ANALYSIS	53
5.1	Introduction	53
5.2	Steady State Analysis	54

المنارة للاستشارات
www.manaraa.com

5.2.1 Compressible Flow and Heat Transfer Modeling 55
5.2.2 Fin Analysis 58
5.2.3 Calculations for Fin Efficiency 59
5.2.4 Results of Fin Analysis 61
5.3 Parametric Analysis 62
5.4 Axial Distribution of Cooling through Constant Temperature Cooling Passage 64
5.5 Conclusions 65

CHAPTER 6 ANALYTICAL TRANSIENT ANALYSIS 66

6.1 Formulation of Semi-Infinite Solid Problem 66
6.2 Calculations 67
6.3 Plotting Transient Temperature Distribution Profiles for Glass and Mold 69
6.4 Surface Heat Flux Calculations 71
6.5 Conclusions 72

CHAPTER 7 MATHEMATICAL MODELING OF THE PROBLEM 73

7.1 Governing Equations and Modeling 74
7.2 Finite Element Models 77

CHAPTER 8 RESULTS OF NUMERICAL SOLUTION 79

8.1 Problem Definition 80
8.2 Results of the Numerical Simulation 81
8.3 Temperature Distribution Data 85
8.4 Conclusions 85

CHAPTER 9 EXPERIMENTAL RESULTS 87

9.1 Measurement of Bottle Temperatures 87
9.2 Bottle Lean Data Analysis 89
9.3 Mold Temperature Measurements 95
9.4 Conclusions 98

CHAPTER 10 CONCLUSIONS AND RECOMMENDATIONS 98

10.1 Conclusions 98
10.2 Recommendations 98

REFERENCES 101

المنارة للاستشارات
www.manaraa.com

LIST OF TABLES

Table 4.1	Flow Meter Reading for Each Hole	49
Table 4.2	Flow Velocity through Each Hole	50
Table 5.1	Results of Fin Analysis	61
Table 5.2	Results of Increasing Air Coolant Passage Diameter in Finned and Un-Finned Passages	63
Table 5.3	Effects of Variations in Body Temperature on Existing and Prototype Molds	63
Table 5.4	Relative Cooling at Various Mold Sections	64
Table 6.1	Variation in the Temperature Distribution Depending on the Location and Time for the Glass	69
Table 6.2	Variation in the Temperature Distribution Depending on the Location and Time for the Mold	70
Table 6.3	Surface Heat Flux Variation with Time	71
Table 8.1	Comparison of Temperatures between the Anchor Mold and USF Mold	85
Table 8.2	Comparison of Temperatures between Bottles Extracted from the Anchor Mold and USF Mold	85

المنارة للاستشارات
www.manaraa.com

LIST OF FIGURES

Figure 1.1	Viscosity-Temperature Curve for Silicate Glass	2
Figure 2.1	Apparatus for Uniform Cooling of Glass Molding Machines	8
Figure 2.2	Method for Blow Molding and Cooling Hollow Glassware	9
Figure 2.3	Mold Cooling Arrangement for Use in Glassware Forming Machine	10
Figure 2.4	Mold Cooling Arrangement for Use in Forming Machine	11
Figure 2.5	Method of Cooling a Mold	12
Figure 2.6	Mold Cooling Arrangement for a Glassware Forming Machine	13
Figure 2.7	Mold Portion with Cooling Means for Use in Molding Molten Glass	14
Figure 2.8	Systems for the Cooling of Hot Molds	15
Figure 2.9	Mold Assembly for the Glass Articles	16
Figure 2.10	Method of Cooling a Mold	18
Figure 2.11	Mold Cooling Apparatus for a Glassware Forming Machine	19
Figure 2.12	Apparatus and Method for Cooling a Mold	20
Figure 2.13	Fluid Cooling of Glass Molds	21
Figure 2.14	Mold with Exterior Heat Conducting Elements	23
Figure 2.15	Blow Mold Cooling	24
Figure 2.16	Cooling Molds Used in Forming Glassware Containers	25
Figure 2.17	Arrangements for Mold Cooling	26

المنارة للاستشارات
www.manaraa.com

Figure 2.18 Method and Apparatus for Mold Cooling 28

Figure 2.19 Molding Cooling System for the Manufacture of Glass Articles 28

Figure 2.20 Glass Forming Mold 29

Figure 2.21 Controlling the Temperature of a Glass Mold 31

Figure 2.22 Controlling the Temperature of a Mold 32

Figure 2.23 Mold Arrangement for a Cyclically Operating Glassware Container Manufacturing Machine with Temperature Sensing Means 33

Figure 2.24 Cooling Articles of Newly Molded Glassware 34

Figure 2.25 Glassware Molding Machine with Unitary Axis Molding 35

Figure 2.26 Apparatus for Forming Glass Articles with Treating Mean 37

Figure 3.1 Gob Delivery 39

Figure 3.2 Start of Press 39

Figure 3.3 Press Time 40

Figure 3.4 Plunger Down 41

Figure 3.5 Reheat 42

Figure 3.6 Reheat and Run 42

Figure 3.7 Final Blows and Vacuum Forming 43

Figure 3.8 Mold Open and Takeout 44

Figure 3.9 Dead Plate Time 44

Figure 4.1 Mold with Fins Cut through it Exposing the Outer Row Holes 45

Figure 4.2 Experimental Setup to Analyze Air Flow through Cooling Holes in the Mold 46

Figure 4.3 Cross section of the Mold Showing Inner and Outer Row Holes 48

المنارة للاستشارات
www.manaraa.com

Figure 4.4 Air Velocity (fps) Vs Hole Number in the Mold (Inlet Pressure of 20Psi) 51

Figure 4.5 Air Velocity (fps) Vs Hole Number in the Mold (Inlet Pressure of 20Psi) 51

Figure 5.1 One dimensional MATHCAD model 54

Figure 5.2 Schematic Representation of the Fin inside the Air Cooling Channel 59

Figure 5.3 Varying Heat Transfer Rate with Fin Thickness 62

Figure 5.4 Axial Distribution of Cooling through Constant Temperature Passage 65

Figure 6.1 Semi Infinite Solid with Constant Wall Temperature 66

Figure 6.2 Transient Temperature Distribution in Semi Infinite Solid (Glass) 70

Figure 6.3 Transient Temperature Distribution in Semi Infinite Solid (Mold) 71

Figure 6.4 Plot of Surface Heat Flux with Time 72

Figure 7.1 Two Dimensional Model of the Mold 74

Figure 7.2 Two Dimensional Finite Element Model of the Mold 78

Figure 8.1 Mold Cross Section at the Shoulder 80

Figure 8.2 Temperature Distribution of Glass at the Neck Section (Degree F) 81

Figure 8.3 Temperature Distribution of Mold at the Neck Section (Degree F) 81

Figure 8.4 Temperature Distribution of Glass at the Shoulder Cross Section (Degree F) 82

Figure 8.5 Temperature Distribution of Mold at the Shoulder Cross Section (Degree F) 82

Figure 8.6 Temperature Distribution of Glass at the Neck Section (Degree F) 83

Figure 8.7 Temperature Distribution of Mold at the Neck Section (Degree F) 83

Figure 8.8 Temperature Distribution of Glass at the Shoulder Cross Section (Degree F) 84

المنارة للاستشارات
www.manaraa.com

Figure 8.9 Temperature Distribution of Mold at the Shoulder Cross Section (Degree F) 84

Figure 9.1 Bottle Shoulder Temperatures Measured at Dead Plate 88

Figure 9.2 Bottle Neck Temperatures Measured at the Dead Plate 89

Figure 9.3 Measured Lean on Control Sample, 30-195° Air Circulation 90

Figure 9.4 Measured Lean on Control Sample, 60-175° Air Circulation 91

Figure 9.5 Measured Lean on Prototype Mold, 50-195° Air Circulation 92

Figure 9.6 Measured Lean on Prototype Mold, 70-195° Air Circulation 92

Figure 9.7 Measured Lean on Prototype Mold, 60-175° Air Circulation 93

Figure 9.8 Measured Lean on Prototype Mold, 60-175° Air Circulation 93

Figure 9.9 Measured Lean on Prototype Mold, 70-175° Air Circulation 94

Figure 9.10 Standard Mold Thermal Image during Tests 95

Figure 9.11 Prototype Mold Surface Image during Tests 96

Figure 9.12 Standard Mold Surface Image during Tests. 97

Figure 9.13 Prototype Mold Surface Image during Tests 97

المنارة للاستشارات
www.manaraa.com

ANALYSIS OF GLASS MOLD TO ENHANCE RATE OF HEAT TRANSFER

Anand Warude

ABSTRACT

Narrow Neck Press and Blow (NNPB) process is used to produce light weight bottles. The gob of molten glass is delivered to the blank mold and a specially designed narrow diameter plunger is used to form the finish or mouth and the parison as it presses upwards. Invert and final blow takes place followed by take-out and annealing. Anchor Glass Container Corp. (AGC) uses NNPB technology in their glass making plants. The problem experienced by AGC in the process is that the heat dissipation through out the mold is not uniform and hence there is a non uniform temperature distribution in the finished bottle extracted from it. Specifically the shoulder region of the bottle stays at a higher temperature when compared with the other regions, becoming the limiting factor in determining the rate of bottle production. Excessive temperatures in any region leave the glass insufficiently rigid, allowing the bottle to sag or lean. An increased rate of production which demands faster and effective cooling of the bottle is desired and is the ultimate goal of this research effort.

This problem can be effectively solved by increasing the amount of heat transferred from the mold to the cooling air, which can be done by increasing the surface area of the cooling passages. A mathematical model for calculating the amount of heat

المنارة للاستشارات
www.manaraa.com

transferred to the cooling air is proposed in this thesis. The air properties at the exit of the mold and the amount of heat transferred by each cooling passage were obtained by using MATHCAD. A 2 dimensional numerical simulation for the final molding was carried out using ANSYS and the temperature distribution for the mold and glass were obtained. Results obtained from the above simulations are compared with the thermal images of the bottle taken during the molding operation at AGC, Jacksonville.

المنارة للاستشارات
www.manaraa.com

CHAPTER 1

INTRODUCTION

1.1 Basic Physics

Molten glasses are Newtonian liquids for which rate of flow is directly proportional to applied stress. Quite small stresses or pressures can be used in glass making, so the apparatus used does not need to be massive. All the main methods of making glass rely on the very rapid variation of viscosity with temperature. Silicate glasses are very viscous compared with most familiar liquids and their rate of flow under applied stress increases rapidly as the temperature rises. Glass manufacturing operations depend on adjusting the viscosity (by selecting the right temperatures) so that small stresses are sufficient for shaping the glass and subsequent cooling so that it becomes too viscous to flow under gravity once it has attained the desired form. The most important properties of glass thus are viscosity, density, thermal conductivity and specific heat. The glass forming operations take place at high temperatures at which thermal radiation plays an important role in heat transfer. At maximum melting temperature the viscosity is about log η= 2 and for stress release during annealing it is around log η= 14. Viscosity varies greatly with glass composition.

المنارة للاستشارات
www.manaraa.com

1.2 Glass Forming Operations

The whole cycle of glass forming can be conveniently divided into 3 stages, gathering the glass from the furnace, forming (pressing or blowing), and annealing which means slow cooling of glass to leave very little internal stress at room temperature.

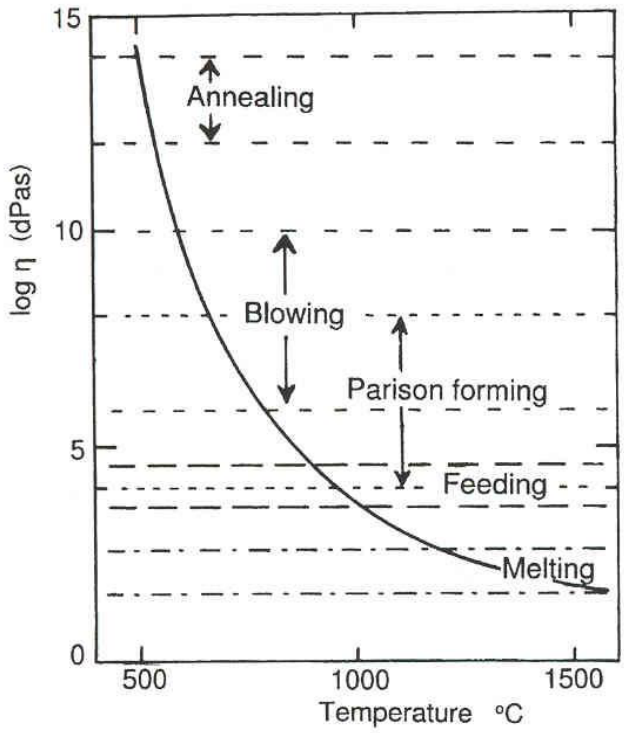

Figure 1.1 Viscosity Temperature Curve for Silicate Glass

Figure 1.1 shows the viscosity-temperature curve for silicate glass showing the ranges used at different stages of glass forming. Adjusting either temperature or the pressures used can vary rates of flow but the rates of heat transfer are not so easy to accelerate and heat transfer often controls the maximum rate of production. Conditions at the glass-mold interface are crucial. Temperature control is very important because, if the glass is too hot it flows easily under gravity and cannot be controlled and if the mold is too hot, even if the glass is at the right temperature, the two stick together. The glass flows to the shape

المنارة للاستشارات
www.manaraa.com

of the mold when the mold and the glass conditions are at the required temperature. The glass and the mold may briefly stick to each other, however the glass is cooled somewhat and contracts whilst the mold is heated and expands. The stresses produced are sufficient to break the weak adhesion and separate the glass and the mold. Therefore there is a limited range of temperature for both glass and mold within which good results can be obtained, which means that the heat transfer coefficient at the inner surface of the mold varies considerably with the time of contact.

Molds are usually made in halves, split vertically, as they need to open and close and are mostly made from special grades of cast iron or brass but other alloys are used for some components. Molds have to be designed and operated to keep the mold temperatures in the correct range (balancing energy loss with heat gain) and to give up as much energy while empty as they gain from the glass while the container is being formed. The molding process will generally occur in two stages. In the first stage, a blob of glass is formed to produce a finished mouth and an interior cavity is preformed; this crude bottle is called a parison. Contact of the glass with walls of the parison mold chills the surface of the glass as the parison is being shaped. After removing the parison from this mold, heat continues to flow from the bulk of the glass toward the surface, reheating this surface to allow further processing. Very steep temperature gradients occur near the surfaces of the glass while in contact with the mold. When shaping of the parison is finished the mold halves are open just a fraction to create a small air gap between the glass and the mold which causes a great decrease in the rate of heat transfer from the glass, as a result the chilled surface layer regains temperature and its viscosity decreases so that the parison is more easily blown in the second mold. An appreciable proportion of

المنارة للاستشارات
www.manaraa.com

heat removed from the glass is lost from the inner surface of the mold by cooling it with compressed air while empty, but conduction through the wall and loss from the outer surface also plays an important role.

In this study, we are examining methods of improving the energy removal process so as to permit shorter processing times and to speed production.

1.3 History of Glass Molding

In 1859 the first vertically split iron mold with movable base plate and means for blowing compressed air to make bottles was designed by Mein of Glasgow. The most important change to the manual process was to make the mouth or finish first, so that the glass could be held in a neckring while the rest of the operations were performed. In 1866 H.M.Ashley and Josiah Arnall proposed to use an inverted mold with a plug at the bottom to make the mouth of the container and a sliding base plate to press the glass down into the neckring to form the mouth. The base plate was retracted to the top of the mold and compressed air was used to blow the top of the bottle.

In 1887 Ashley came up with two crucial improvements, the provision of a separate neckring mold to hold glass during other manipulations and use of a separate parison mold which gave better distribution of wall thickness. A simple machine with one pair of mold operating on the above principle claimed that the labor cost was reduced considerably. The machine needed to be fed by hand with gobs of glass. Achieving an almost constant weight of the glass and thus internal capacity

Hollow glass articles such as bottles and jars, when molded by a forming machine individual section ("I.S.") type using Narrow Neck Press and Blow (NNPB) process are

المنارة للاستشارات
www.manaraa.com

molded in two steps. In the first step, perform of the finished container, which is usually called a blank or a parison, is molded by an annular mold made up of a pair of mating blank mold sections. Upon the completion of the blank molding step, the blank molding step, the blank molding section separate and the parison is transferred to another mold station, often called blow mold station, where it is blown into its final shape by another mating pair of mold sections. During the molding operation a great deal of heat is transferred from the semi-molten glass to the molds, and it is necessary to cool the molds in a predetermined and controlled manner in order to ensure the consistent molding conditions which result in a glass container with uniform wall thickness and a sufficiently low heat content to enable it to stand after leaving the mold. At the conclusion of the blow mold process, the mating sections of the blow mold are separated, and the container is removed from the forming machine for further processing.

1.4 Objective

Anchor Glass Container Corp. uses the same technology discussed above in their glass making plant. The problem experienced by the Anchor Glass Company is that the heat dissipation throughout the mold is not uniform resulting in a non uniform temperature distribution in the bottle extracted from it. As a result the shoulder region of the bottle stays at a higher temperature when compared with the other regions, resulting in a lean which is undesirable. Lean can be defined as the offset between a good bottle and a bottle which tilts at some cross-section. Also an increased rate of production which demands faster and effective cooling of the bottle is desired.

المنارة للاستشارات
www.manaraa.com

This problem can be effectively solved by increasing the amount of heat transferred from the mold to the cooling air. The heat transfer rate is increased by increasing the surface area of the cooling passages. A mathematical model for calculating the amount of heat transferred to the cooling air is proposed in this thesis. The air properties at the exit of the mold and the amount of heat transferred by each cooling passage were obtained by using MATHCAD. Numerical simulation for the critical sections of the glass mold was carried out using ANSYS. The temperature distribution trough out the mold and glass were obtained in this simulation. Results obtained from the above simulations are compared with the thermal images of the bottle taken during the tests conducted at Anchor Glass Corporation, Jacksonville.

المنارة للاستشارات
www.manaraa.com

CHAPTER 2

LITERATURE REVIEW

As a part of this study all recent patents related to glass mold cooling were reviewed to determine the particular design aspect that is being claimed. To a large extent, the patents selected were those initially identified by Anchor Glass. Where the patents, themselves, have referred to earlier patents deemed relevant are included in the overall survey. The patents were reviewed and categorized to classify the particular aspect of mold cooling by topic, summarizing the ideas in the paragraphs below.

2.1 Patents Relating to the Air Cooling of Molds

2.1.1 Apparatus for Uniform Cooling of Glass-Molding Machines

This invention, covering the air cooling of the neck ring and parison mold was filed in 1967 by A.E. Kurtz [1]. The figure to the right refers to that portion of the patent relating to cooling the parison. It is shown in the upper portion of the figure as item 26. The power cylinder, item 32, is used to drive a punch into the blank forming the blow hole. In this design air is introduced into the chamber, 22. The chamber is sealed from the cooling passages around the parison by a seal, 50. The seal is attached to a cylinder, 52.

المنارة للاستشارات
www.manaraa.com

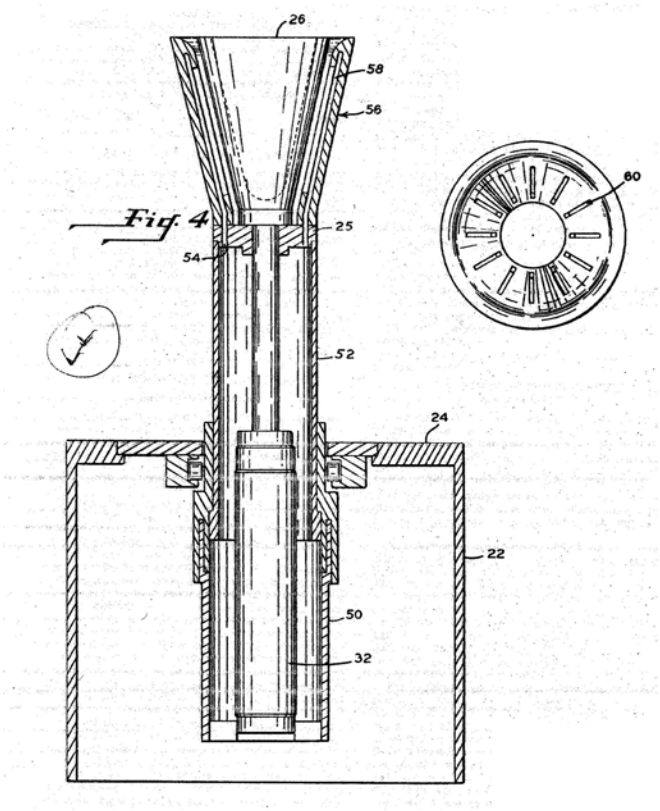

Figure 2.1 Apparatus for Uniform Cooling of Glass Molding Machines

When the cylinder is rotated, the passages are opened allowing cooling air to pass uniformly around the outside circumference of the parison. The design is claimed to uniform and constant cooling of the mold.

2.1.2 Method for Blow Molding and Cooling Hollow Glassware

This patent relating to cooling hollow glassware was filed in 1979 by John K Martin and assigned to Vitro Tec Fedeicomiso [2]. This patent included a very brief explanation of the concept. Essentially the inverter has patented the idea of using a

المنارة للاستشارات
www.manaraa.com

partial seal about the top of the bottle so that blowing air simultaneously shapes the bottle and the continuous flow provides for continuous interior cooling.

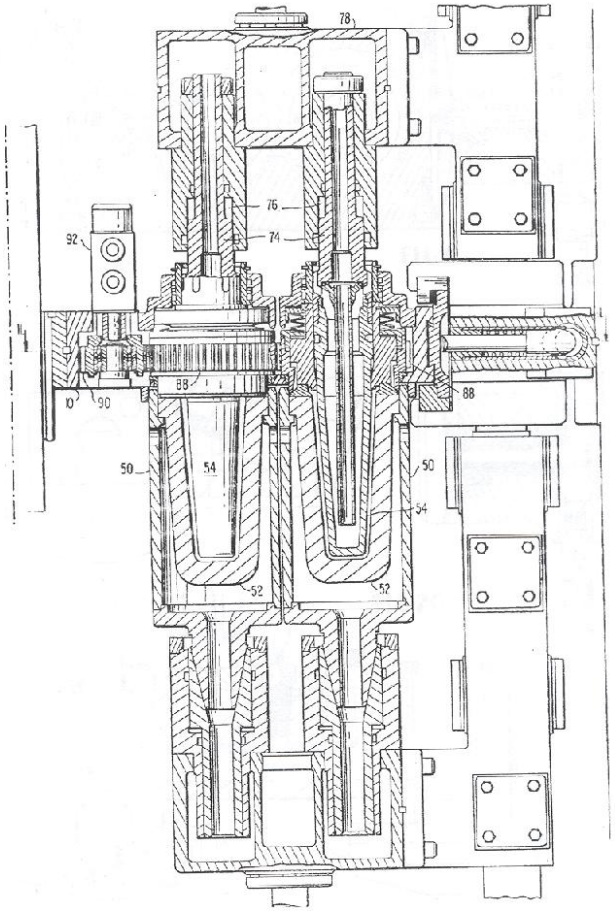

Figure 2.2 Method for Blow Molding and Cooling Hollow Glassware

2.1.3 Mold Cooling Arrangement for Use in Glassware Forming Machine

This patent, relating to a parison mold cooling arrangement for use in glassware forming machine was filed in 1986 [3] by Constantine W. Kulig and was assigned to Emhart Industries Inc. One feature of this invention is that air cooling passages come

المنارة للاستشارات
www.manaraa.com

into registry when the mold is opened. The patent also covers a design for directing air flow to the neck ring mold

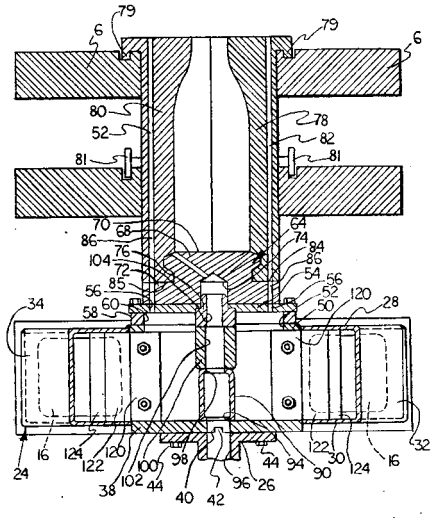

(a)

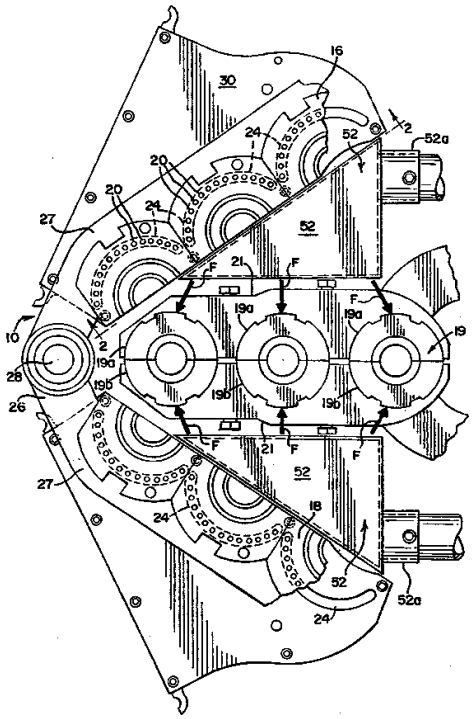

(b)

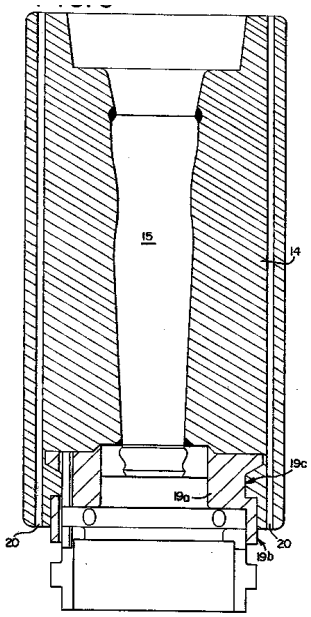

(c)

Figure 2.3 Mold Cooling Arrangement for Use in Glassware Forming Machine

المنارة للاستشارات
www.manaraa.com

2.1.4 Forming Machine

This patent, relating to cooling device for glass container forming machine, was filed in 1990 by Roger Erb and Robert Johnson [4]. It was assigned to Emhart Industries Inc. The invention comprises an arrangement to air cool the molds for a glass parison. Cooling flows to a plenum below the bolds and through axial cooling passages in the mold when the air passages align themselves with the plenum openings. The cooling passage extends through the axial dimension of the mold and thus provides cooling of separate neck finish ring.

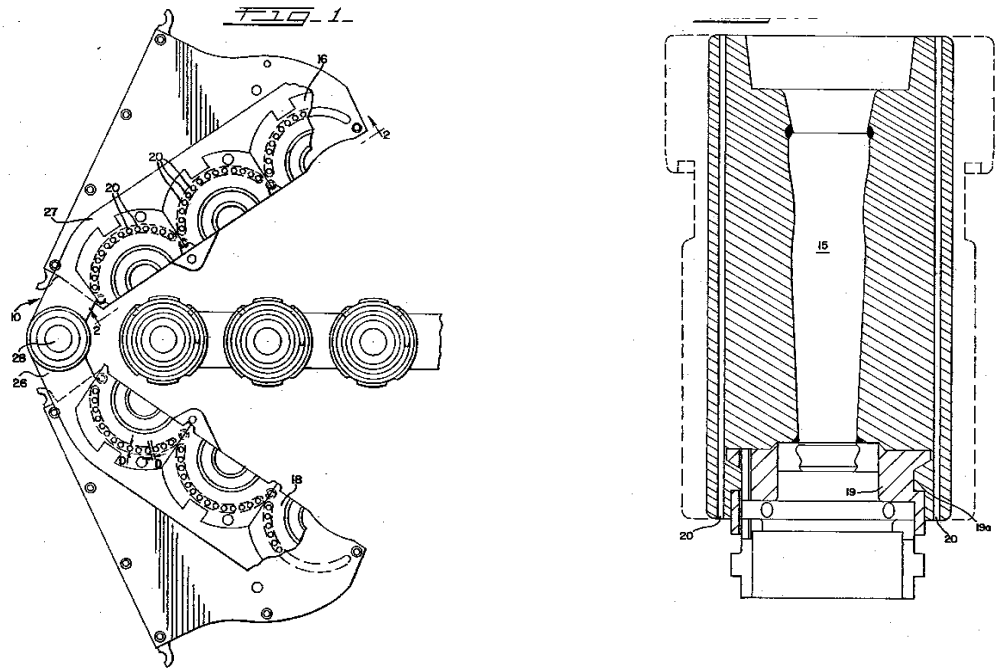

Figure 2.4 Mold Cooling Arrangement for Use in Forming Machine

المنارة للاستشارات
www.manaraa.com

2.1.5 Method of Cooling a Mold

This patent was filed in 1982 by Thomas V. Foster and assigned to Emhart Industries [5]. This invention is concerned with a method of cooling a mold in glassware forming machine where at least one portion of the mold is supported on a movable support which opens and closes the mold. In this invention an intermediate support is irremovably mounted on the mold support, which provides access to the spaces that insulate the mold from the mold support and provides access to the space to blow cooling air, which impinges on mold portion through apertures in intermediate support. Increased cooling can be obtained by blowing cooling air between fins on outer surface of the mold portion. A thermocouple embedded on mold potion also helps achieving better control of cooling airflow.

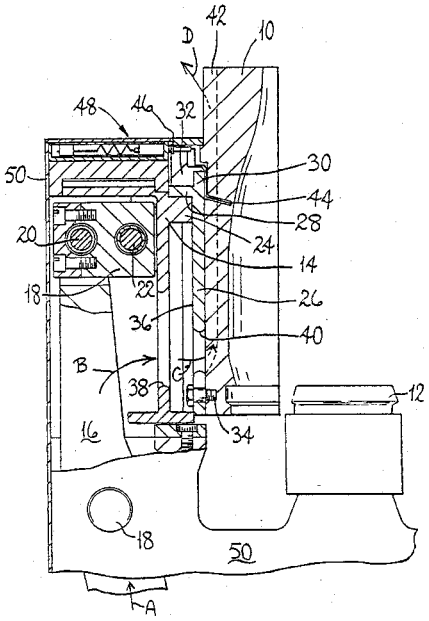

Figure 2.5 Method of Cooling a Mold

المنارة للاستشارات
www.manaraa.com

2.1.6 Mold Cooling Arrangement for a Glassware Forming Machine

This patent, covering the design of an air cooled glassware forming machine (parison mold), was filed in 1984 by Thomas V. Foster and assigned to Emhart Industries [6]. The concept appears to be a variation of certain of the other Emhart patents describing vertically orientated, radially arrayed air passages arranged radially about the outer perimeter of the mold. The arrangement comprises of mold cavity having an upwardly facing opening. Cooling passages extending vertically in the mold body and opening on the upper surface, cooling air passes through these opening and cools the mold body. Air is delivered to cooling passages by an annular chamber that is operative when mold closes so that, in this case, air flows downward. Provisions are made for water entrainment into the cooling air to enhance cooling.

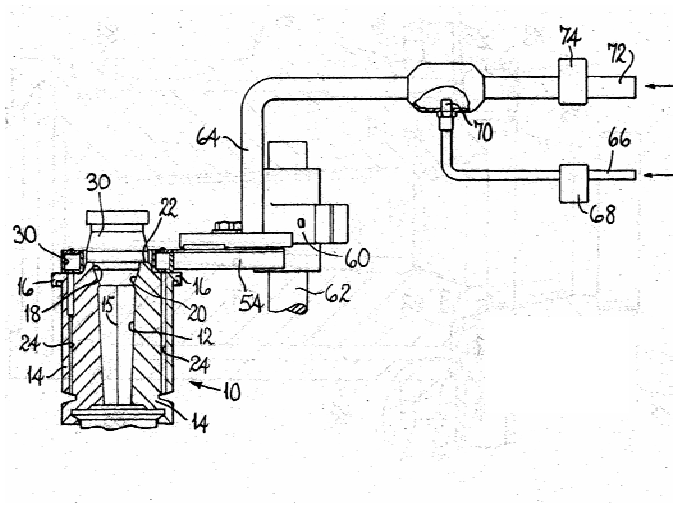

Figure 2.6 Mold Cooling Arrangement for a Glassware Forming Machine

المنارة للاستشارات
www.manaraa.com

2.1.7 Mold Portion with Cooling Means for Use in Molding Molten Glass

Thomas V. Foster filed this patent in 1986 and again assigned it to Emhart Industries [7]. This describes an invention to enhance cooling in specific hot spots inside the mold. A rod, of a material having higher thermal conductivity than that of the mold, is inserted into a hole projected toward the mold cavity. This rod extends from region requiring higher heat extraction into a recess in an outer surface of the mold. An air passage enters this recess and air flow is such that it swirls around the rod, providing efficient cooling.

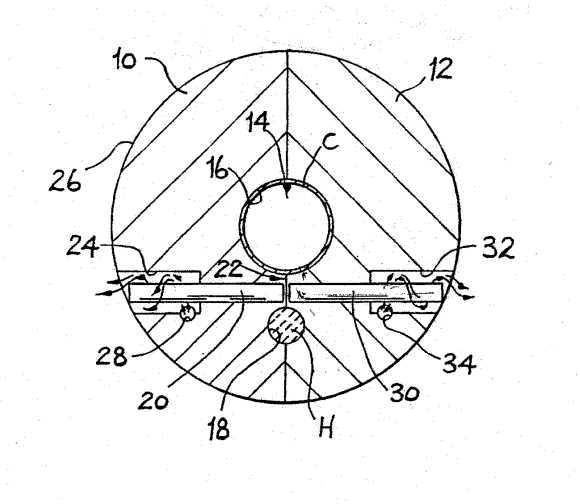

Figure 2.7 Mold Portion with Cooling Means for Use in Molding Molten Glass

2.1.8 System and Method for the Cooling of Hot Molds

Rolando Cantu-Garcia filed this patent on 19 Jun 1986, assigning the invention to the company Vidriera Monterrey [8]. The invention provides for enhanced heat transfer for the conventional vertical air coolant passages. This is achieved by means of a set of

المنارة للاستشارات
www.manaraa.com

nozzles, located at the passage inlet, which impart a swirling component to the air flow pattern. This is an effort to implement one of several possible enhanced heat transfer solutions to achieve more effective cooling within a given passage space. There are other more effective, means of enhancing heat transfer which would not fall within this patent.

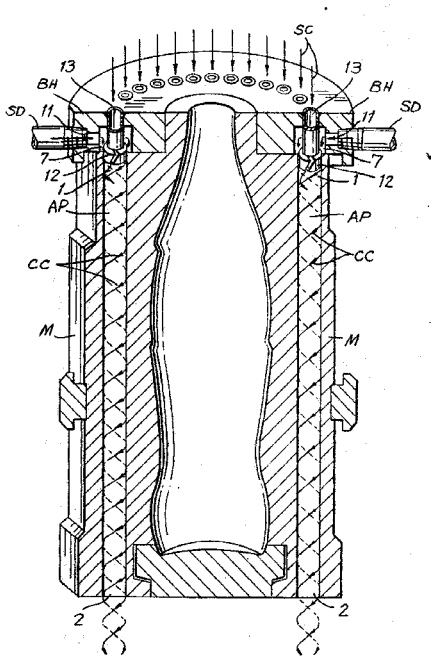

Figure 2.8 System for the Cooling of Hot Molds

2.1.9 Mold Assembly for the Glass Articles

This patent, relating to mold assembly for glass articles was filed in 1997 by Dan Haynes and assigned to Owens-Brickway Glass Container Inc. [9]. The patent would clearly appear to be intended for air cooling, but the applicant has taken the precaution of explicitly claiming that the idea could be used with any fluid. What is unique is that the intended air flow path is directly radially inward against the center section of the mold

المنارة للاستشارات
www.manaraa.com

and allowed to exit by splitting the flow path both upward and downward. The surface of the mold has finned ribs situated on the exterior surface to further enhance heat transport. Distribution control of the cooling fluid is achieved by applying a split perforated screen to the interior of each section of the mold holder. The fabrication costs of molds are claimed to be reduced in comparison with those molds having coolant passages contained in molds themselves. This claim is due to the cooling system being on the mold holder itself and hence can be used with a variety of molds, reducing mold structure complexity.

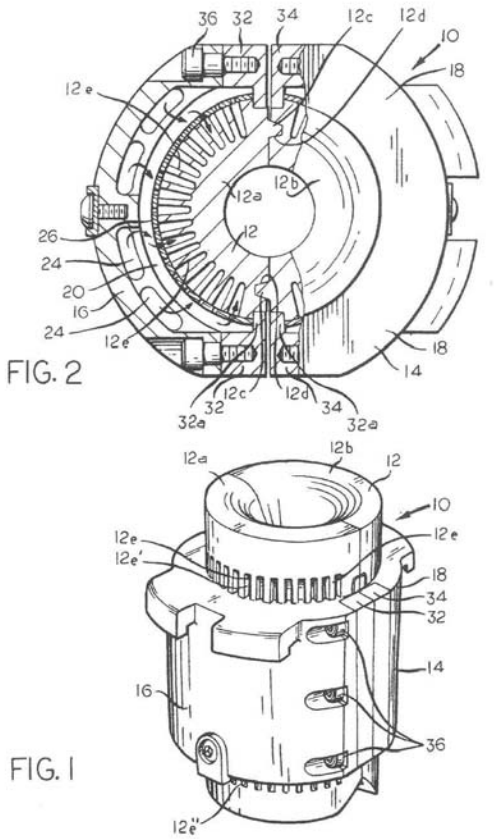

Figure 2.9 Mold Assembly for the Glass Articles

المنارة للاستشارات
www.manaraa.com

2.1.10 Cooling Arrangement for a Mold of a Glassware Forming Machine of the Individual Section Type

This patent, relating to the design of an inlet plenum to distribute uniform coolant flow rates to air cooled molds, was filed in 1985 by Stanley Peter Jones and assigned to Emhart Industries Inc. [10]. The arrangement includes an air blowing means, a ducting arrangement to conduct cooling air to a plenum chamber and the chamber itself. The plenum chamber communicates with the entrances of the air cooling passages in the mold halves. It is claimed that this device operates with an air pressure of between 1100-200 mm of water at the entrance of cooling passages and that this value is substantially lower than the then current designs.

2.1.11 Method of Cooling a Mold

This patent was filed in Canada and was accessed through the Canadian Intellectual Property Office. Unfortunately, this source does not list the inventor or the date that the patent was issued. This patent describes a method of air cooling a blank mold used for making a parison. The primary element of the design is the baffle, i.e. the top portion of the mold contacting what would be the base of the inverted parison. When the baffle is in position on the mold; air is blown through the passages in the baffle into the passage in the mold to cool the mold. This method of cooling the mold blank can be applied whether the parison is formed by blowing or pressing.

المنارة للاستشارات
www.manaraa.com

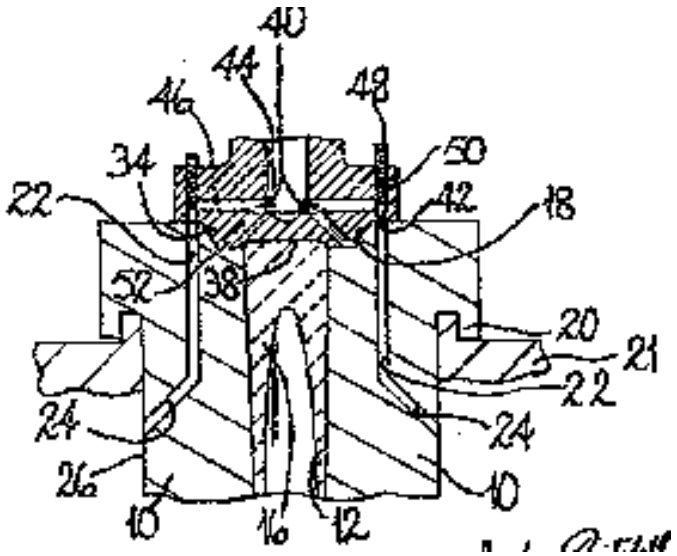

Figure 2.10 Method of Cooling a Mold

2.1.12 Mold Cooling Apparatus for a Glassware Forming Machine

The above invention, relating to mold cooling apparatus for a glassware forming machine was filed in 1994 by Richard T Kirkman and assigned to Wens Brockway Glass Container Inc. [11]. The invention relates to air cooling of single or multiple cavity molds and addresses both the plenum arrangement and the mold coolant passages. In this arrangement cooling air is directed from the plenum, through a diffuser plate and against the mold halves. The diffuser plate will cover the greater part of the side of the mold so that the air flow pattern is primarily inward radially. Venting of the cooling air is through an exhaust port at the top of the mold.

المنارة للاستشارات
www.manaraa.com

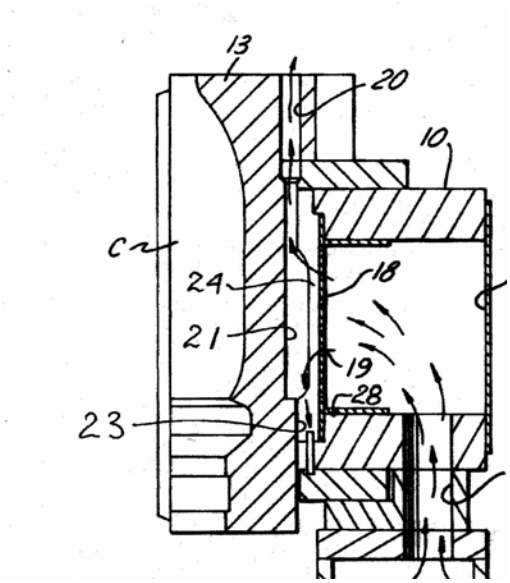

Figure 2.11 Mold Cooling Apparatus for a Glassware Forming Machine

2.1.13 Apparatus and Method for Cooling a Mold

This patent, relating to the method for cooling a mold was filed in 1992 by Charles Trevor Lawrence and assigned to VHC Limited [12]. The invention provides an arrangement for air cooling glass forming molds which is adaptable to both blank and blow molds. The mold holder is designed with internal air passages to provide for a continuous passage of cooling air to the mold. Air enters these passages through an opening on the side of the mold and, from hence to a vertical cooling passage between top and bottom of the mold.

المنارة للاستشارات
www.manaraa.com

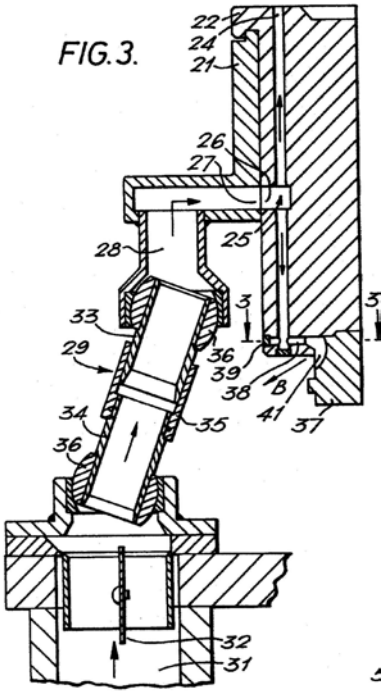

Figure 2.12 Apparatus and Method for Cooling a Mold

2.2 Liquid Cooling of Molds

The following patents describe various methods of introducing liquid cooling. The intention is to make use of the much larger convective coefficients generally associated with such fluids. Because of the low boiling temperature of water at low pressure, some consideration might be given to alternate coolants, but it appears that each of these designs is intended to use water. If excessive water temperatures are to be avoided, the designer must provide a system that will result in a large temperature drop between the mold and the coolant and that is the central feature of each of these patents.

المنارة للاستشارات
www.manaraa.com

2.2.1 Fluid Cooling of Glass Molds

This patent, describing the fluid cooling of glass molds, was filed by Millard Jones in 1977 and assigned to Owens-Illinois [13]. This particular patent has received extra consideration in that some have suggested that it may cover a wide range of liquid cooling designs. After a fairly careful review, it is limited in scope and unlikely to encompass those ideas under consideration in this design effort.

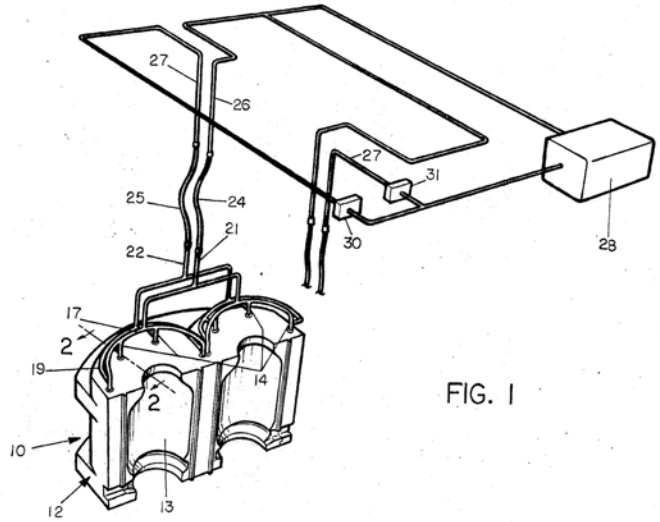

Figure 2.13 Fluid Cooling of Glass Molds

The basic cooling arrangement is very similar to that used in air cooled molds; several radially spaced, axial passages are provided, either in mold itself as in a mold holder. These are said to provide "a good heat transfer relationship" to a set of mold inserts. In order to provide a sufficient temperature drop between the cooled surfaces and the liquid coolant, these passages are radially insulated using 316 stainless steel compacting powder for managing the heat transfer. They may extend through the mold

المنارة للاستشارات
www.manaraa.com

from the top, substantially to the lower end of mold. The liquid coolant passes through the coaxially positioned metal tubes in passage, Proper selection of thickness of material, its degree of compression and its composition results in desired temperature at the molding surface of mold. The primary invention claimed herein is the use of compacted granules, i.e. 316 stainless steel but compacted powders of other origin are also included.

2.2.2 Mold with Exterior Heat Conducting Elements

This patent relating to the exterior heat conducting elements in a mold was filed in 1981 by Julius J Torok [14]. In his invention, heat flows from the forming surface to the outer surfaces of the mold. The outer surface of the mold is thermally connected to a set of fluid conduits via a set of thermally conducting elements. While the conducting elements are designed to maintain thermal contact, through proper sizing they are used to provide the necessary temperature drop between the mold surface and the circulating coolant. The inventor states that "The heat conducting elements are designed with respect to the heat transfer to be of specific shape, size and material such that when the mold is in service each segment of the forming surface is at a predetermined temperature." The patent also includes a design in which the mold includes two parts, a glass forming part and a heat dissipating part; the two parts are said to be connected through a thermally conducting interface.

المنارة للاستشارات
www.manaraa.com

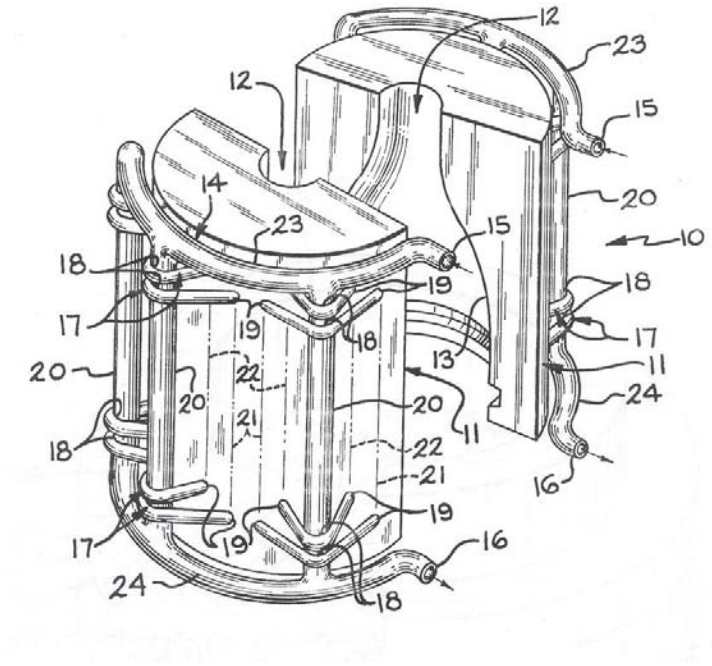

Figure 2.14 Mold with Exterior Heat Conducting Elements

2.2.3 Blow Mold Cooling

This patent, relating to blow mold cooling, was filed in 1984 by Richard Alan Letellier and assigned Emhart Industries Inc. [15]. The invention describes a method to cool molds by spraying cooling a fluid (i.e. water) on to outside as well as the inside of each mold valve. Cooling is achieved by means of several cooling spray nozzles which spray water directly onto respective mold halves. The cooling is done by a control valve which operates such that cooling fluid is sprayed only when molds are open and stops when the molds close.

المنارة للاستشارات
www.manaraa.com

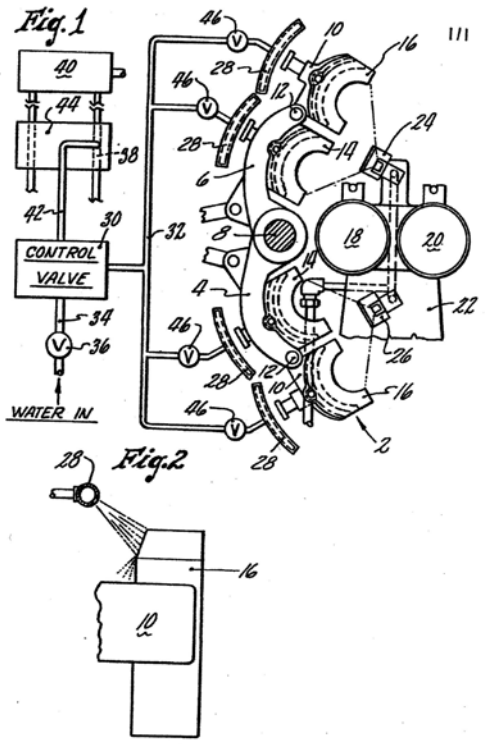

Figure 2.15 Blow Mold Cooling

2.2.4 Cooling Molds Used in Forming Glassware Containers

This patent, relating to water cooling of final molds in a glassware forming machine, was filed in 1982 by Stanley Jones and assigned to Emhart Industries Inc. [16]. Particular care was taken to limit the temperature to which water is exposed to prevent vapor formation. This is accomplished by providing a thermal barrier between the mold and coolant passage. This barrier consists of a stand off bracket with limited contact area designed to produce a large temperature difference. The thermal conductivity of the

المنارة للاستشارات
www.manaraa.com

barrier can be varied by cutting holes or adding pads to the bracket. This is a very broad claim and may cover designs well beyond those originally envisioned by the inventor.

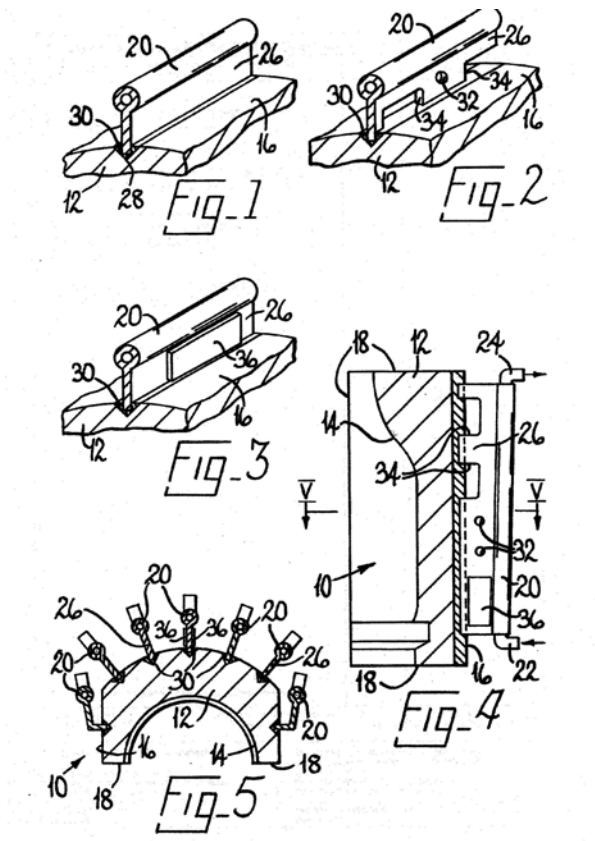

Figure 2.16 Cooling Molds Used in Forming Glassware Containers

2.2.5 Mold Cooling

This patent was filed by Stanley Peter Jones in 1986 and was assigned to Emhart Glass Machinery Inc. [17]. This patent describes water cooling of a mold assembly. The cooling assembly is provided with a cooling passage through which water flows. The

المنارة للاستشارات
www.manaraa.com

cooling assembly and mold are assembled such that they enclose a thin chamber (which is heat barrier) between external surface of cooling assembly and mold. A mixture of gases preferably air and helium is provided to the enclosed chamber to control transfer of heat between mold and cooling assembly, controlled cooling of the mold can be achieved by varying the proportion of helium in cooling air.

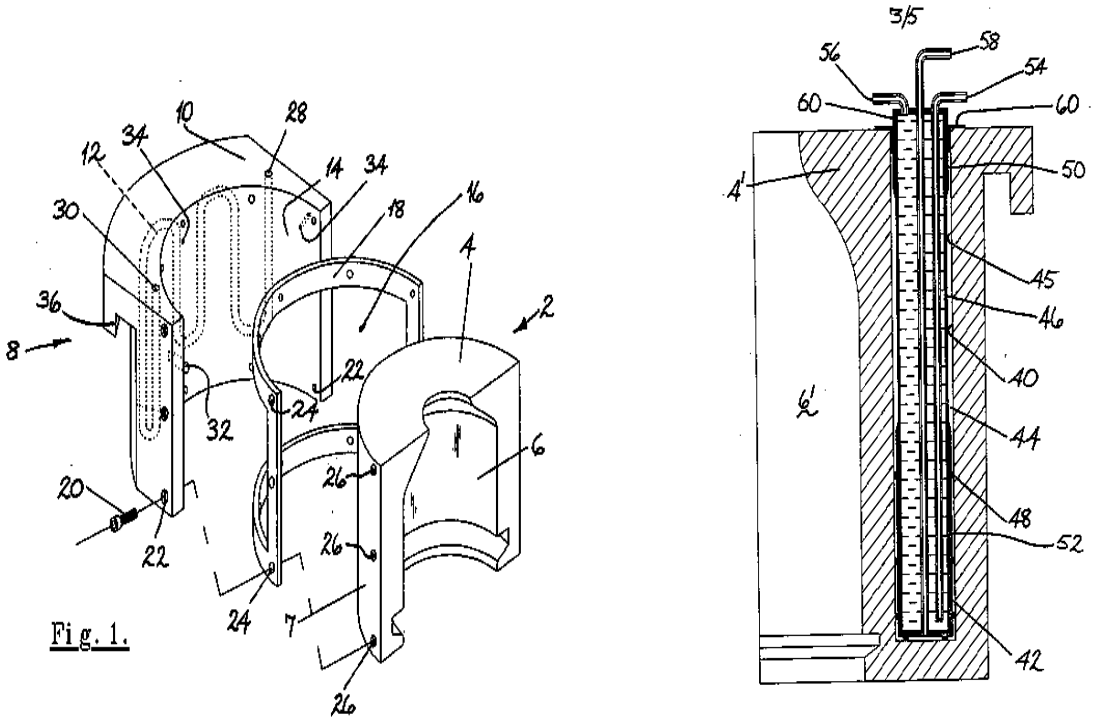

Figure 2.17 Arrangements for Mold Cooling

2.2.6 Method and Apparatus for Mold Cooling

This patent was filed in 1988 by Guillermo Cavazos and M. De Cervantes [18]. In this patent he has adopted the concept of a reboiler to the cooling of a mold. In this case a phase change liquid (distilled water) is allowed to boil inside of a mold cavity.

المنارة للاستشارات
www.manaraa.com

Each of these mold cavities is provided with a series of vertically arranged blind bores between the molding surface and the mold exterior. The bores are connected to a common manifold, acting as a vapor separator, and which, in turn, is connected to a condenser. The bores are filled with the phase change liquid which is vaporized due to heat transfer. The vapor rising from the mold rises to the manifold/vapor separator. The liquid is allowed to flow by gravity back into the cooling chamber inside the mold.

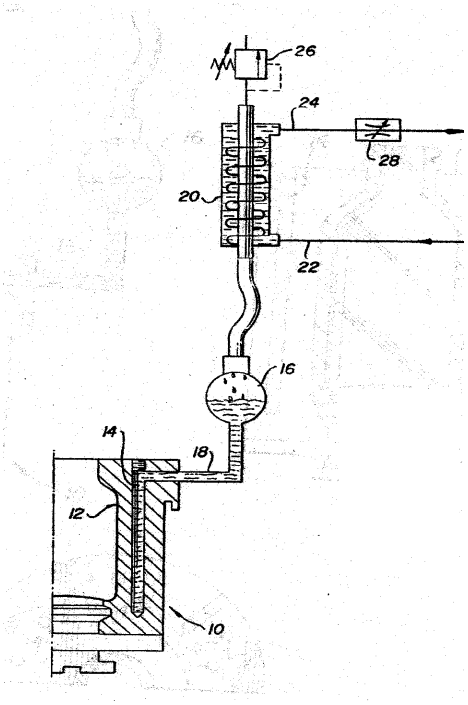

Figure 2.18 Method and Apparatus for Mold Cooling

The vapor flows upward to a condenser, is condensed and flows back into the mold via the manifold. This is not a good arrangement if the primary coolant is water. The problem is that water pressures will need to be quite high if water is to boil at the desired temperature.

المنارة للاستشارات
www.manaraa.com

2.3 Liquid Metal Cooling

Several patents have been issued to consider the use of liquid metals to moderate the range of temperature variations within the mold. These are summarized below:

2.3.1 Molding Cooling System for the Manufacture of Glass Articles or Similar Materials

This patent, relating to molding cooling system for the manufacture of glass articles or similar materials, was filed in 1989 by Alfredo Martinez-Soto et.al. and assigned to Vitro Tee Fideicomiso [19]. The invention describes a cooling system for a parison glass mold with a plunger to pre-form the cavity. The mold used consists of first body having an internal cavity made of Fe, Cu or Ni base alloys and a second body to absorb heat and control heat extraction. During the cycle, the second body will undergo an alternate freezing/melting process so as to moderate the magnitude of any temperature peaks within the combined system.

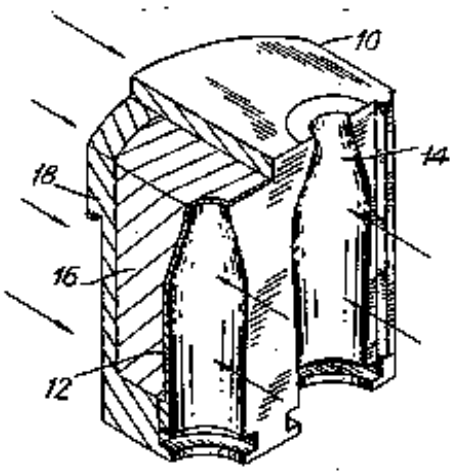

Figure 2.19 Molding Cooling System for the Manufacture of Glass Articles

المنارة للاستشارات
www.manaraa.com

Thermal load variations will affect amount of liquid and solid zone of the second body is preferred to have high thermal conductivity, high heat capacity, and high melting point. A third body complements the mold in order to release heat and can be provided with grooves, holes, pipes for fluid cooling in order to dissipate heat.

2.3.2 Glass Forming Mold

This patent, relating to cooling glass forming mold, was filed in 1962 by Hanns Stinnes and Martin Strasse [20]. This particular patent is of particular interest in that it involves heat transport by radiation. However, radiation is used in a substantially different manner than envisioned in the design under consideration.

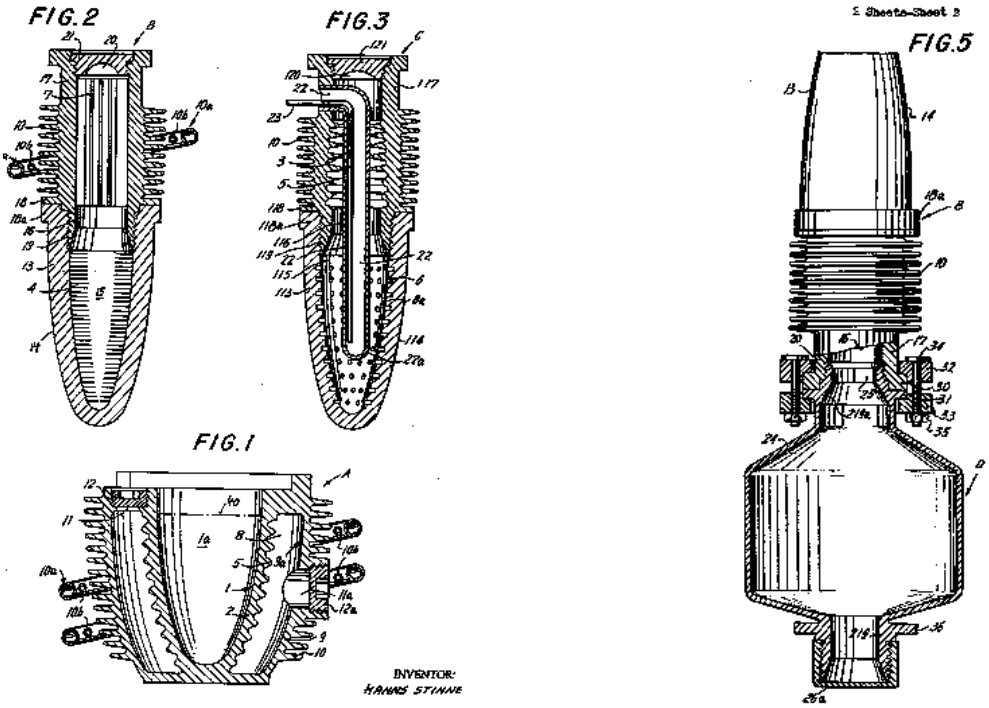

Figure 2.20 Glass Forming Mold

المنارة للاستشارات
www.manaraa.com

The inventor has designed a cooling system with which incorporates a liquid metal between the primary mold and the surroundings. The benefit from the liquid metal is that it acts to ensure a uniform temperature across the mold surface. Heat is unidirectionally conveyed from the forming surface to the liquid metal and then to the second surface portion of the mold. The space between two surfaces is filled with a heat conducting substance (Na), so that it cannot react with atmosphere air from the second surface, heat is radiated to the surroundings via a set of radiating/convecting fins.

2.4 Controlling Mold Temperature

The following patents refer to ideas for monitoring and controlling mold surface temperature.

2.4.1 Controlling the Temperature of a Glass Mold

This patent was filed by Stanley P. Jones in 1984 and assigned to Emhart Industries [21]. This particular invention has focused upon controlling the temperature of a glass mold. This method involves the formation of a passage in the mold wall, extending from external surface to a position adjacent to the cavity. An infra-red radiation transmitting device is inserted in this passage. During the manufacture of molded articles the temperature of the mold is detected and this information is used to control the mold heating or cooling means. The transmitting device is usually silica or glass rod, but an aluminum tube may be alternatively used.

المنارة للاستشارات
www.manaraa.com

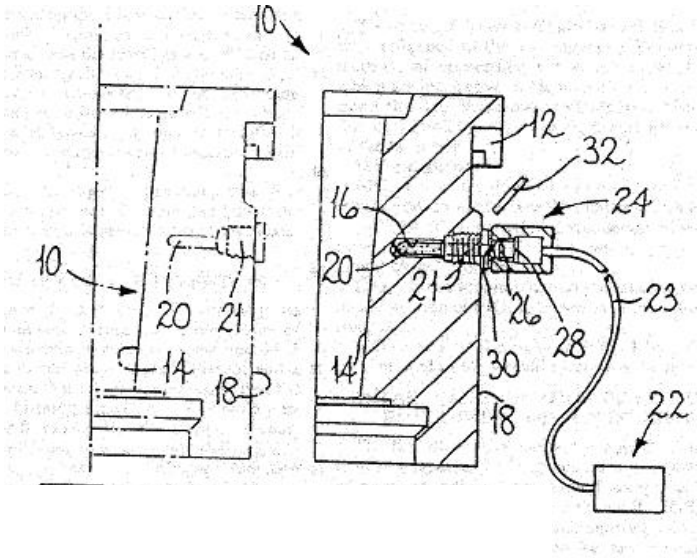

Figure 2.21 Controlling the Temperature of a Glass Mold

2.4.2 Controlling the Temperature of a Mold

This patent, relating to controlling the temperature of a mold, was filed in 1984 by Stanley Peter Jones and assigned to Emhart Industries Inc. [22]. It appears to be very close in concept to the U.S. Patent Number.4,519,827 granted to Stanley Jones the same year. In this invention an infrared, radiation transmitting device and an infrared radiation detection device are used to detect the temperature of the mold during the manufacture of molded articles An infrared radiation transmitting device is inserted in a passage in the mold portion adjacent to the mold cavity. The infrared radiation detection device is connected by a fiber optic guide to the transmitting device. The device is connected to control means of the machine in which mold portion is mounted. This information is used to control the operation of mold heating or cooling means.

المنارة للاستشارات
www.manaraa.com

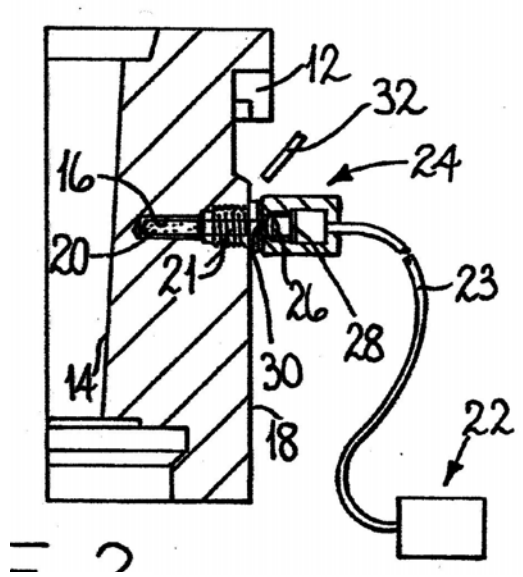

Figure 2.22 Controlling the Temperature of a Mold

2.4.3 Mold Arrangement for a Cyclically Operating Glassware Container Manufacturing Machine with Temperature Sensing Means

This patent, relating to mold arrangement for a cyclically–operating glassware container manufacturing machine with temperature sensing means, was filed in 1984 by Frank A. Fenton and assigned to Emhart Industries Inc. [23]. The object of the invention is to provide a mold arrangement for cyclic operating glassware manufacturing machine, in which a temperature detecting device is able to detect the temperature of the mold. The blank as well as the final mold carry a temperature detecting device which is operable to detect the temperature of at least one of the side mold portions. The temperature detecting device can be a thermocouple or an infrared radiation transmitting device as shown in the attached drawings.

المنارة للاستشارات
www.manaraa.com

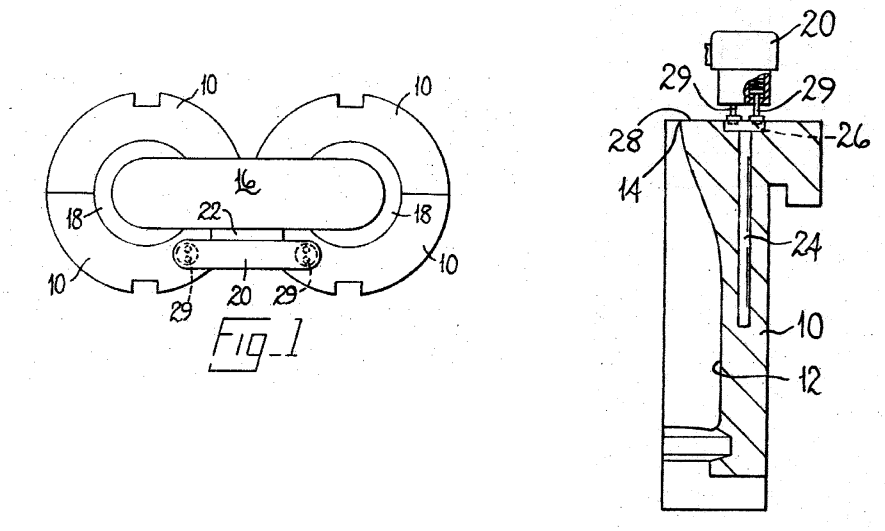

Figure 2.23 Mold Arrangements for a Cyclically Operating Glassware Container Manufacturing Machine with Temperature Sensing Means

2.5 Dead Pan Cooling

A patent has been applied to the problem of cooling the bottom of freshly molded glassware. Because of the significantly greater thickness of the base of many such items, there will be a greater problem with excessive reheating in this region. One ideas to deal with this problem is presented below.

2.5.1 Cooling Articles of Newly Molded Glassware

This patent, relating to cooling articles of newly molded glassware, was filed in 1984 by Hermann Heinrich Nabelung and assigned to Emhart Industries Inc. [24]. This invention is relating to cooling of newly molded glassware with a dead plate arrangement. The object of the invention is to enable cooling of articles of glassware to take place on a dead plate without having to be held in position by the take out

المنارة للاستشارات
www.manaraa.com

mechanism of the machine. The newly molded glassware is positioned on the horizontal dead plate with a central opening of the dead plate beneath the central region of the bottom of the article and a plurality of grooves around the periphery. Air is sucked from central opening and so that the glassware stays in place and is also blown on sidewalls of the articles through plurality of nozzles uniformly spaced around the article, thus effecting cooling of the bottom as well as sides of the glass article.

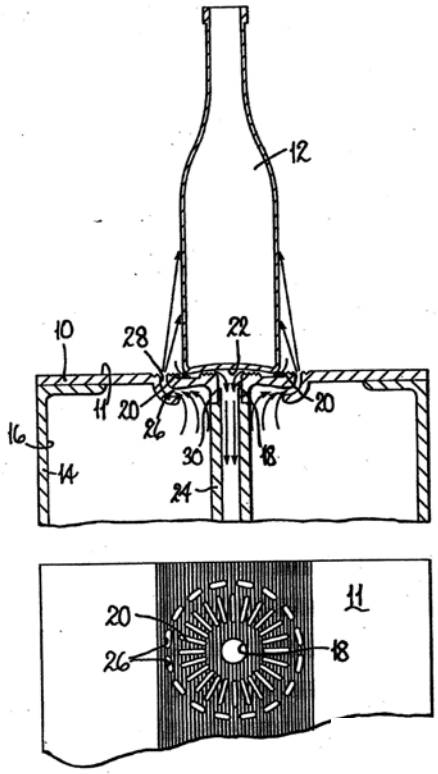

Figure 2.24 Cooling Articles of Newly Molded Glassware

المنارة للاستشارات
www.manaraa.com

2.6 Neck Mold Assembly Cooling

The neck mold is a separate item and will require special consideration for cooling during the overall glass forming process. The neck ring contains somewhat thicker glass than the body of the molded item. Moreover, since this portion of the item is used to handle and transport the parison and finished item, it will undergo higher stresses.

2.6.1 Glassware Molding Machine with Unitary Axis Molding

This patent was filed by Wilbur Orland Doud in 1987 and was assigned to Ball Corporation. Doud designed a glassware molding machine with a plunger and neck mold assembly that works in conjunction with a carriage and a parison blank mold [25]. The assembly also acts to suspend the completed parison by the neck ring portion.

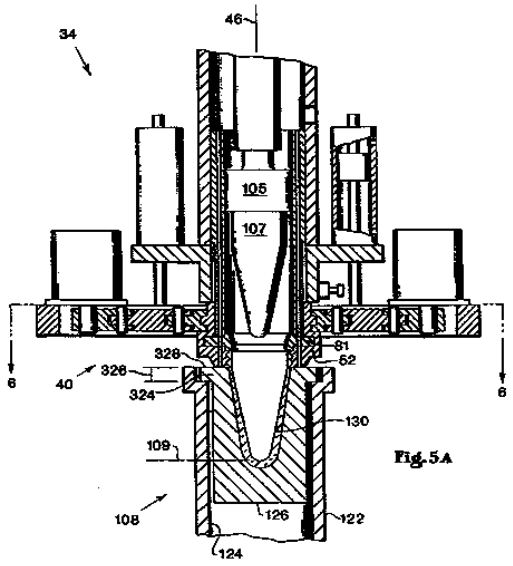

Figure 2.25 Glassware Molding Machine with Unitary Axis Molding

المنارة للاستشارات
www.manaraa.com

The whole assembly is designed such that while one pair of forming molds transports the completed container for cooling, the other pair of forming mold portions is opened to have a continuous operating cycle.

2.6.2 Glass Container Forming Machine Including Neck Ring Mold Cooling

This patent, relating to Glass container forming machine including neck ring mold cooling, was filed in 1992 by Robert S. Johnson & Robert D. Hall and was assigned to American National Can Company [26]. It is an object of the invention to provide a simple low cost way of providing adequate cooling to a neck ring mold of a parison forming machine. Reduction in neck ring mold temperature allows increased speed of operation. An air supply is provided at the parison forming station and directs a flow of cooling air at exterior surfaces of neck ring mold extensions, thereby cooling the mold halves even in the closed position. The mold halves also have a vertical cooling air passage for enhanced heat transfer through the mold.

2.7 Interior Cooling in the Finishing Mold

2.7.1 Apparatus for Forming Glass Articles with Treating Mean

This patent, relating to the apparatus for forming glass articles with treating means, was filed in 1965 by John E. Cook and was assigned to Owens. The invention relates to a method and apparatus for controlling the cooling air on a Westlake glass blowing machine. In this method, a gather of glass is placed on the upper end of a spindle. When the spindle rotates, end for end, about its axis, a small amount of air is introduced to the interior of the gather to form an initial cavity. Cooling air is also

المنارة للاستشارات
www.manaraa.com

directed against the sidewall of parison from one direction in order to control its elongation. The amount of cooling air will determine the rate of elongation of parison. The spindle end which holds the upper end of parison is cooled by air directed against the side of the spindle. Just before the enclosing of parison within the paste mold, the spindle rotation is interrupted so that greater amount of glass is accumulated near the bottom of parison and increase in elongation rate uninfluenced by centrifugal force. Now the cooling air directed against the sidewall of parison is discontinued where as the cooling air directed against the spindle is continued so as to avoid uneven glass thickness distribution upon final expansion of the parison in the paste mold.

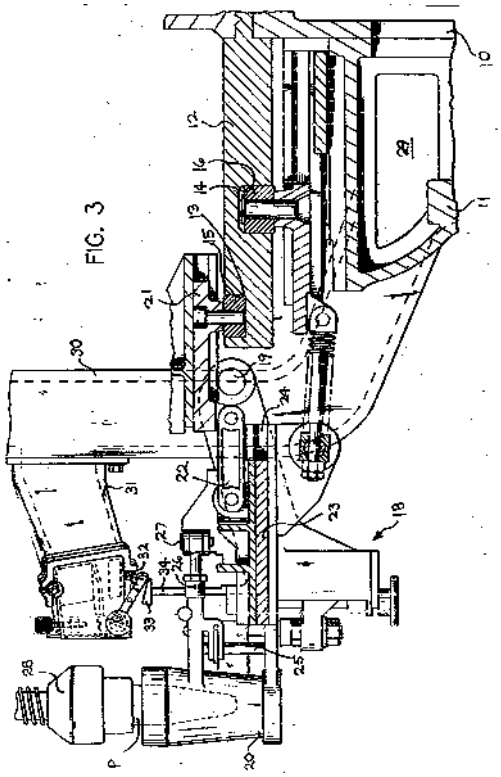

Figure 2.26 Apparatus for Forming Glass Articles with Treating Mean

المنارة للاستشارات
www.manaraa.com

CHAPTER 3

NARROW NECK PRESS AND BLOW PROCESS

The narrow neck press and blow (**NNPB)** process was introduced to gain better control over glass distribution in the container. The improved control over glass distribution has enabled significant reduction in glass weight of up to 33% without adversely affecting the mechanical performance of the container. A key component in the above process is the plunger, used to form the cavity in the parison during the forming stage. The function of the plunger is to evenly distribute the glass within the blank mould cavity and to aid the removal of thermal energy from the internal surface of the parison.

The NNPB Forming Cycle can be split into the following steps

3.1 Gob Delivery

With the plunger in loading position, the gob is delivered through the funnel of the blank and loads on top of the plunger. Gob shape and loading depth are the most important factors. Loading depth into the blank should be about ¼ inch below the top of the blank.

المنارة للاستشارات
www.manaraa.com

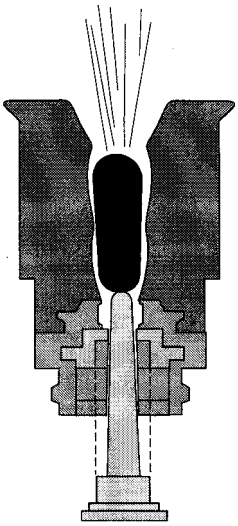

Figure 3.1 Gob Delivery

3.2 Start of Press

The pressing action starts as soon as possible after the glass loads into blank and the baffle is down. Once the glass enters the blanks, it cools rapidly hence, the pressing should start as soon as possible which allows a lower pressure to be used.

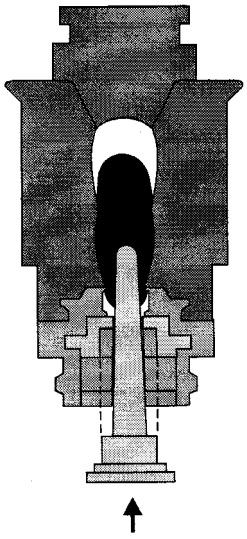

Figure 3.2 Start of Press

المنارة للاستشارات
www.manaraa.com

3.3 Press Time

During press, the plunger travels in an upward direction forcing the glass up against the baffle and then down into the neckring to the parison. Correct weight is very critical there has to be just enough glass to fill the cavity between the plunger and the blank. The amount of pressing pressure applied is approximately 8 to 12 lbs. excess pressure may cause defects such as split finishes, and blank tears.

.

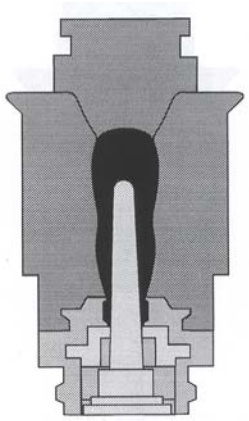

Figure 3.3 Press Time

3.4 Plunger Down

In this step the plunger retracts to its full down position where it compresses the receiver spring and is stopped by the loader spacer. At this point, there is enough clearance for the invert mechanism to transfer the parison to the mold side without the neckring making contact with the plunger. Parison reheat will then begin on the inside of the parison. At this point the colder inner skin of the parison will be heated up by the hotter glass in the middle of the parison.

المنارة للاستشارات
www.manaraa.com

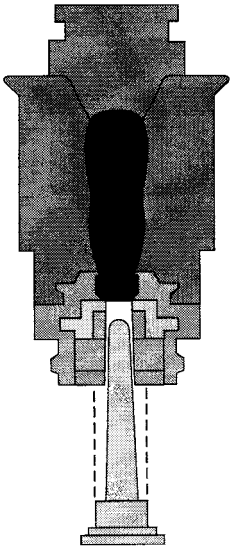

Figure 3.4 Plunger Down

3.5 Reheat

Total parison reheat is initiated when the baffle is up, the blank open, and the plunger is in the down position. This process will continue until the final blow is applied. At this point, the parison is transferred to the mold as soon as possible. Correct invert speed and cushioning are important factors. Too fast or too slow invert speed can cause swung baffles. It can also cause the parison to be pinched by the mold. At this time, the effects of reheat will cause glass to soften and start to run at the bottom of the mold.

المنارة للاستشارات
www.manaraa.com

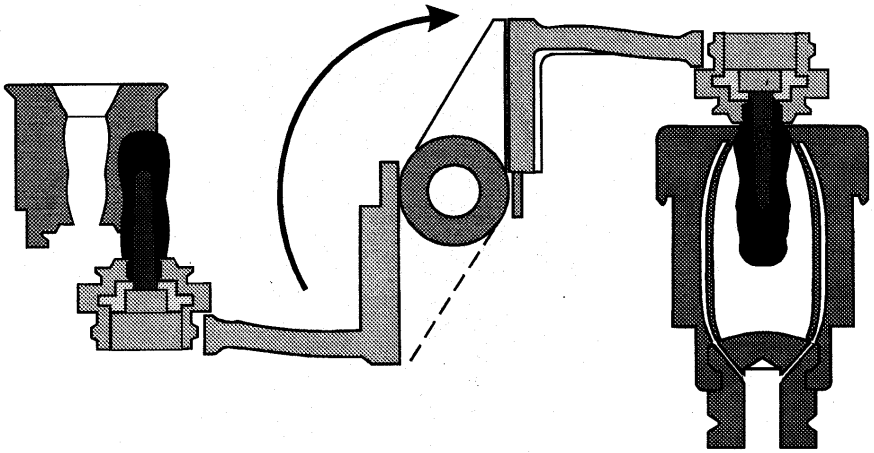

Figure 3.5 Reheat

3.6 Reheat and Run

Reheat will remain in process and continue until final blow is applied. As soon as the parison is transferred to the mold side, it starts running towards the bottom of the plate. The amount of run time is determined by the job being made. The longer the parison is allowed to run, the thicker the glass will be in the bottom area.

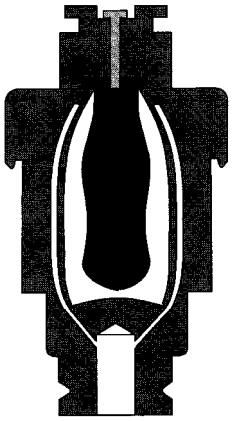

Figure 3.6 Reheat and Run

المنارة للاستشارات
www.manaraa.com

3.7 Final Blow and Vacuum Forming

The amount of final blow and vacuum duration will be determined by the job running. Final blow is applied after the blowhead is on the mold and should be off before the blow head rises. Vacuum should be applied approximately 5 deg before Final blow "on", and turned of 5 deg. after Final blow "off". Vacuum is pulled through valves in the shoulders of the mold and ditches which are milled in the face of the mold. It is then ported through the bottom plate, Verti-flow mechanism, and to the vacuum pump. The air is then exhausted out to the atmosphere.

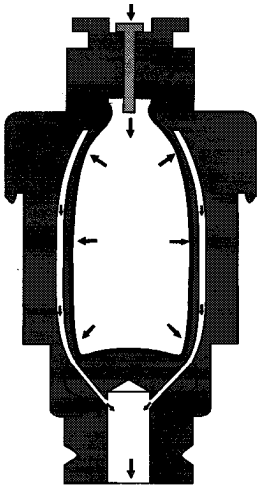

Figure 3.7 Final Blow and Vacuum Forming

3.8 Mold Open and Takeout

The mold opens after the blow head is completely up and the takeout closes around the finish before the mold opens. The takeout action is smooth as possible to lessen the change of defects.

المنارة للاستشارات
www.manaraa.com

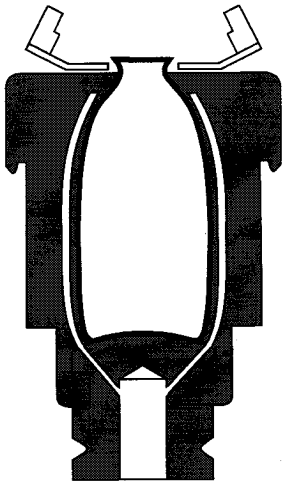

Figure 3.8 Mold Open and Takeout

3.9 Dead Plate Time

The container is about ¼ inch above the dead plate while hanging in the takeout process which allows the air coming through the dead plate to cool the bottom and the sides of the bottle. The amount of time containers are held above the dead plate is determined by the amount of cooling needed to do the job.

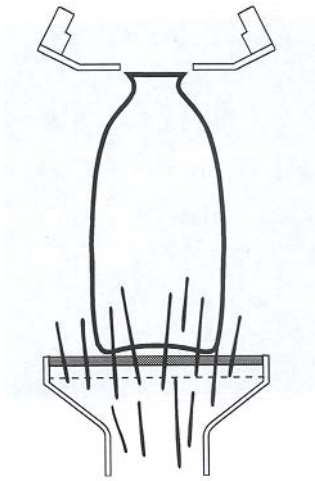

Figure 3.9 Dead Plate Time

المنارة للاستشارات
www.manaraa.com

CHAPTER 4

EXPERIMENTAL ANALYSIS OF AIR FLOW THROUGH COOLING HOLES OF THE MOLD

The mold contains 44 cooling holes passing vertically through upright mold. The analysis of individual vertical passage would normally be a relatively straight forward undertaking, but the problem was complicated by the presence of three circumferential, axially displaced grooves. Horizontal grooves, cut through the outer surface of the mold at an axial position about 1/3 from the top of the mould, penetrate into the outer row of holes leading to discontinuity in the flow of air through the mold.

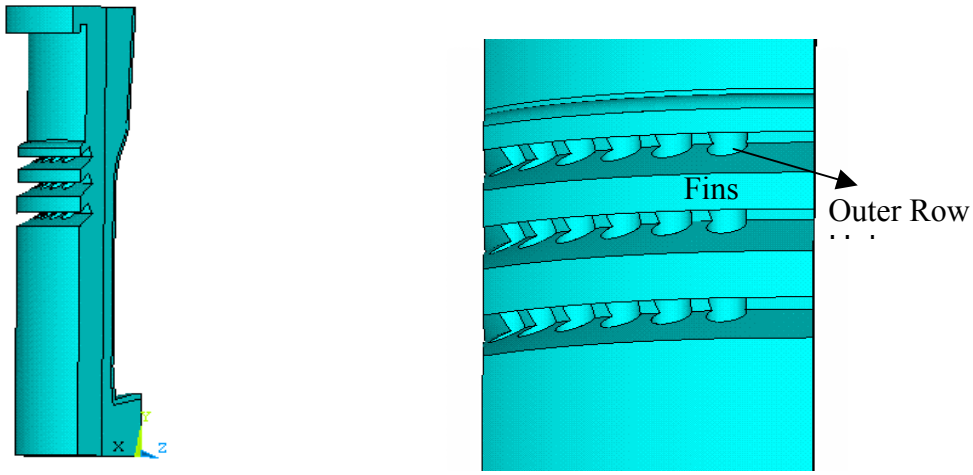

Figure 4.1 Mold with Fins Cut through it exposing the Outer Row Holes

المنارة للاستشارات
www.manaraa.com

In order to establish the relative importance of these grooves on the overall heat transfer process a simple experiment was developed to compare the flow of air through the inner and outer row of cooling holes and to establish what error might be introduced into the analysis should they be ignored.

4.1 Experimental Setup and Procedure

A simple experiment was conducted to analyze the flow of air through the cooling holes of the mold. The main objective of this experiment was to compare the air flow between the inner row of holes and the outer row of holes of the mold. The outer row of holes differ from the inner rows due to the circumferential fins provided on the outer surface of the mold which cut in the mold making small openings in the outer row of holes allowing a venturi effect for the flow of air. Figure 4.2 shows the experimental setup.

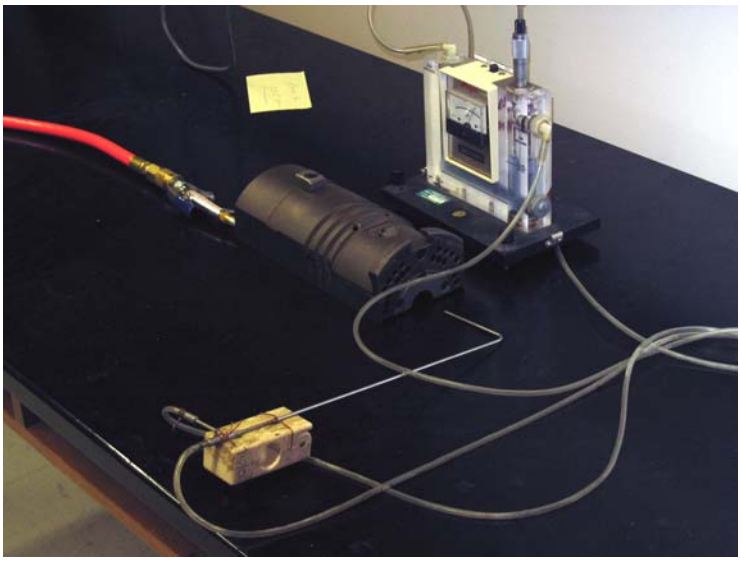

Figure 4.2 Experimental Setup to Analyze Air Flow through Cooling Holes in the Mold

المنارة للاستشارات
www.manaraa.com

Procedure

- The mold and flow meter were placed on a stable table so that the calibration of the meter would not be disrupted during the experiment.
- The flow meter was placed on the table and was leveled such that the bubble on the spirit level was centered. This ensures that the differential elevations within the meter are truly vertical so that accurate readings can be maintained.
- A small nozzle was attached to the outlet air hose of the air compressor to constrain the air flow through the mold holes.
- The flow meter was turned on.
- The needle pointer in the flow meter was adjusted to remove any backlash error.
- The air compressor was turned on and was set at value of 20Psi.
- The nozzle was inserted into the mold hole and the lever provided to the nozzle was depressed to allow flow air flow into the cooling holes of the mold, the high pressure inlet of the flow meter was held at the other end of the mold; values read on the flow meter were noted.
- The same procedure was repeated for all the holes.
- The inlet pressure was then changed to 30Psi and a second set of readings was noted.
- This experiment was repeated on two non-consecutative days with the order of readings being varied to ensure against the introduction of any data bias.
- The pressure was measured remotely from the test section. A long hose ran from the air compressor to the table on which the mold was placed, this accounted for pressure losses. To enable the flow of air into the cooling channels of the mold a

المنارة للاستشارات
www.manaraa.com

nozzle was attached at the end of the hose which further increased the pressure loss. The values of air flow velocities hence obtained appear to be on the lower side. The primary interest of this experiment was however to compare the air flow between the cooling channels based on the relative velocities and not absolute values.

4.2 Observations

Flow meter readings for inlet pressure of 20Psi and 30 Psi are tabulated as shown in the Table 4.1. In the original glass mold the inner and outer row holes are arranged as shown in the Figure 4.3. From the figure it is evident that there are 12 inner row holes and 10 outer row holes.

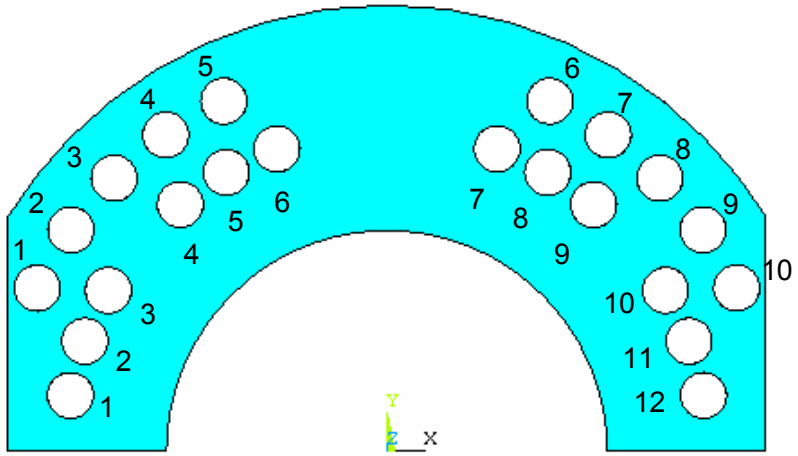

Figure 4.3 Cross-section of the Mold Showing Inner and Outer Row Holes

المنارة للاستشارات
www.manaraa.com

Table 4.1 Flow Meter Reading for Each Hole

Inner Row Hole No.	Flow meter Reading in µA (At 20Psi)	Flow meter Reading in µA (At 30Psi)	Outer Row Hole No.	Flow meter Reading in µA (At 20Psi)	Flow meter Reading in µA (At 30Psi)
1	21	29	1	19	20
2	24	29	2	26	20
3	25	29	3	24	22
4	24	23	4	23	22
5	25	27	5	21	20
6	20	28	6	16	26
7	21	30	7	17	24
8	21	29	8	19	23
9	22	28	9	20	21
10	26	27	10	19	23
11	26	23			
12	25	27			

4.3 Calculations

The values noted above are then used to calculate the air flow velocity through the holes using a simple empirical formula described by equation (4.1) and are tabulated in the Table 4.2.

$$V = 93\sqrt{\frac{FMR}{1000}} \quad \text{Fps} \tag{4.1}$$

Where FMR is the Flow Meter Reading in µA

المنارة للاستشارات
www.manaraa.com

The Standard deviation for the air velocities is calculated to analyze the fluctuations in the air flow through the mold.

Table 4.2 Flow Velocity through Each Hole

Hole No.	Velocity at 20Psi (Fps)		Velocity at 30Psi (Fps)	
	Inner	Outer	Inner	Outer
1	13.477	13.477	18.367	17.889
2	14.408	14.705	18.367	18.130
3	14.105	14.408	16.895	17.149
4	14.408	14.105	16.375	16.637
5	14.105	14.105	17.149	16.895
6	13.153	13.795	16.637	16.895
7	13.477	14.408	17.646	17.149
8	13.477	14.105	17.149	16.895
9	13.795	14.105	16.895	17.399
10	14.996	14.705	17.399	16.895
11	13.477		17.646	
12	13.795		17.399	
Average	13.889	12.936	17.327	17.193
Std Dev	0.550		0.614	

The air velocities in fps calculated using equation (4.1) is plotted against the hole number for both inner and outer rows at the two pressure levels 20 Psi and 30 Psi.

المنارة للاستشارات
www.manaraa.com

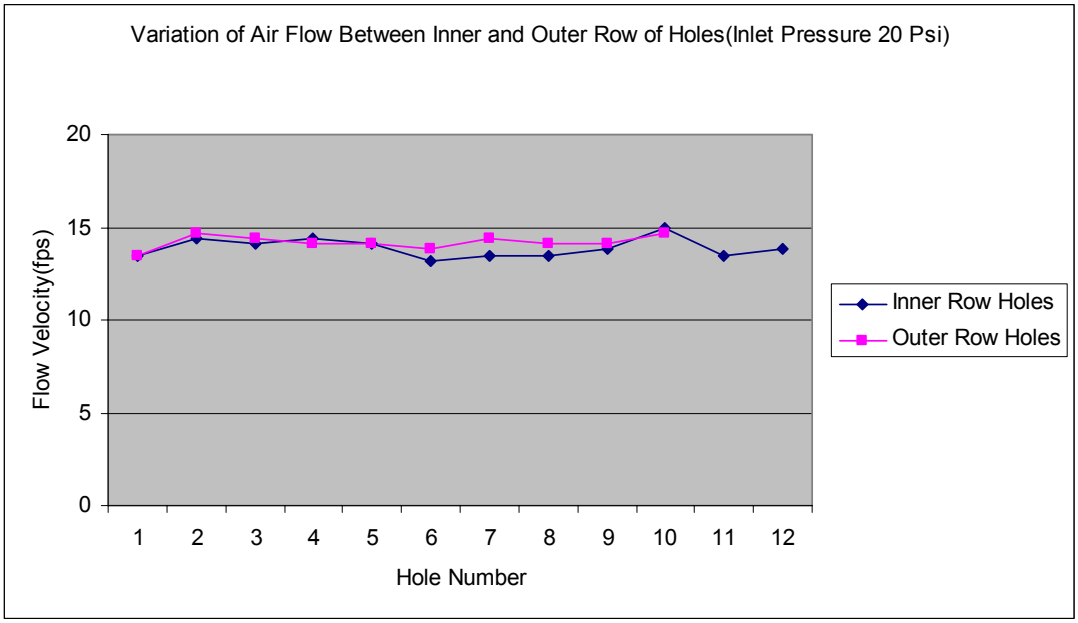

Figure 4.4 Air Velocity (fps) Vs Hole Number in the Mold at an Inlet Pressure of 20Psi

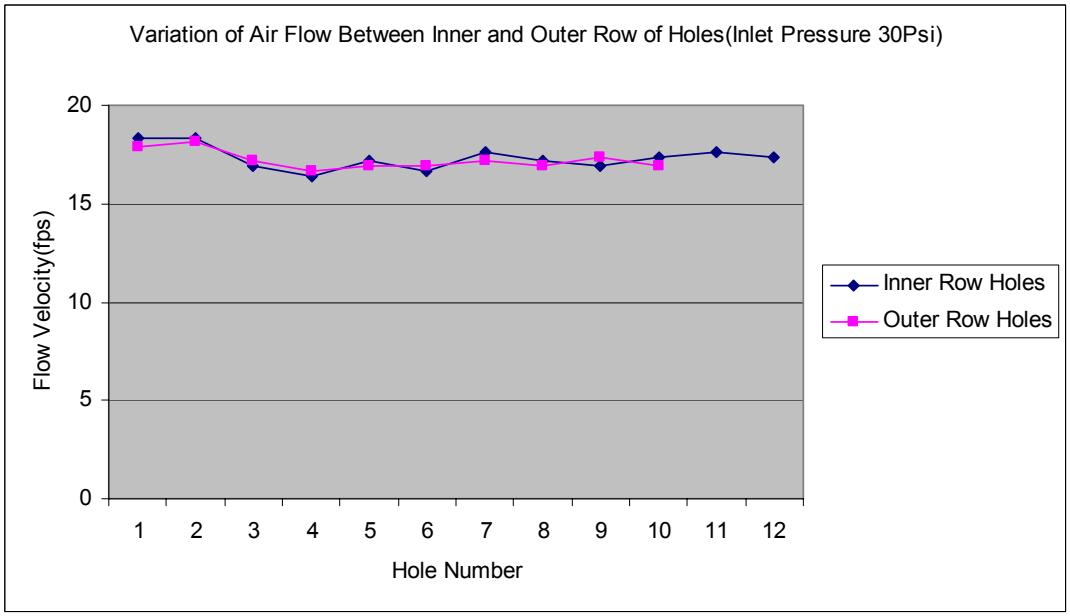

Figure 4.5 Air Velocity (fps) Vs Hole Number in the Mold at an Inlet Pressure of 30Psi

المنارة للاستشارات
www.manaraa.com

4.4 Results and Conclusions

- From the standard deviation and average flow velocities for inner and outer row of holes for both the inlet pressure calculated above it is easily comprehend that the air flow through all the mold holes is almost constant.
- The graphs above show that the air flow velocity from the inner row and outer row of the holes is almost same.
- The fins cut on the outer surface of the mold do not affect the air flow through the outer row of holes.
- The effect of the fins can hence be neglected and the mold holes will be treated as individual vertical passages while calculating the amount of heat transfer and mass flow through each of them.

المنارة للاستشارات
www.manaraa.com

CHAPTER 5

ONE DIMENSIONAL STEADY STATE ANALYSIS

5.1 Introduction

Detailed analytical solutions to the 3 dimensional transient general heat conduction equations are restricted to simple geometries and boundary conditions. In this particular case the geometry and the boundary conditions preclude the use of analytical techniques, and recourse is made to finite differences methods or to one dimensional steady state approximations.

The amount of heat transferred to the cooling air from the mold is calculated in this one dimensional steady state numerical solution. Here we assume a similar performance in the steady state and the transient state solution and variations involved are hence neglected. This MathCAD code calculates the amount of heat transferred per cooling hole at a particular inlet pressure and temperature of air. The geometry of the mold is sufficiently complex; a code for calculating the total amount of heat transferred from the mold to the cooling air was not assessable.

The main objective of the problem is to increase the amount of heat transferred from the mold to the cooling air in a given time interval. This can be achieved by increasing the area of heat transfer. The area available for heat transfer can be increased

المنارة للاستشارات
www.manaraa.com

by drilling bigger diameter holes in the mold. There is a limitation to the increase in the size of the holes as they overlap each other and also drilling holes that are too close causes the web between the holes to be very thin not allowing sufficient area for heat transfer radially outward direction. In laying out the geometry an increase in cooling channel diameter from ¼ to 9/32 inch is recommended.

Introducing a thin metal fin in the holes increases the surface area considerably. The MATHCAD code calculates the mass flow rate of air and the amount of heat transferred per hole taking into consideration the compressible air flow.

5.2 Steady State Analysis

As described above we are trying to analyze the air flow through the mold cooling holes. The problem is simplified and can be defined as shown in the Figure 5.1

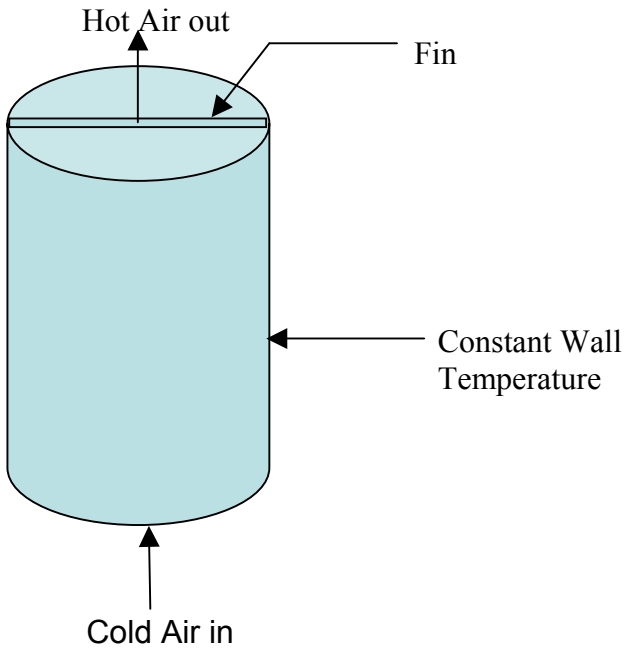

Figure 5.1 One Dimensional Mathcad Model

المنارة للاستشارات
www.manaraa.com

5.2.1 Compressible Flow and Heat Transfer Modeling

The MathCAD code developed solves for frictional and minor flow losses so as to adjust flow rate for a constant pressure drop, ΔP. This problem is subjected to boundary conditions of constant pressure drop and constant wall temperature. Assuming a pressure drop of 60 inches and a constant mold wall temperature of 800°F, a single channel analysis is completed for the inner and outer row of cooling passages.

The expression used for core pressure drop so as to accommodate compressibility effects is that of Kays and London [28]

$$\frac{\Delta P}{\Delta P_1} = \frac{G^2}{2g_c}\frac{v_1}{P_1}\left[\left(K_c + 1 - \sigma^2\right) + 2\left(\frac{v_2}{v_1} - 1\right) + f_F \frac{A}{A_c}\frac{v_m}{v_1} - \left(1 - \sigma^2 - K_e\right)\frac{v_2}{v_1}\right] \tag{5.1}$$

Where,

$G = \rho_a V_a = \rho_b V_b =$ mass velocity based on free flow area

$v_1 =$ Entering specific volume

$v_2 =$ Exiting specific volume

$v_m =$ Mean specific volume

$P_1 =$ Inlet pressure

$\Delta P =$ Core pressure drop

$K_c =$ Entrance loss coefficient

$K_e =$ Exit loss coefficient

$\sigma =$ Ratio of free area flow to frontal area

المنارة للاستشارات
www.manaraa.com

$A =$ Total heat transfer area

$A_c =$ Free flow area

$f_F =$ Core fanning section area

For this particular case the values of the entrance and exit loss coefficients are estimated using the Kays and London's recommendation, $K_c = 0.4 \,\&\, K_e = 0.28$

The heat convected to the gas is equal to $m \cdot c_p(T_{out} - T_{in})$, where m is the mass flow rate, c_p, the fluid specific heat and $T_{out} - T_{in}$ represents the coolant temperature change. Other than increasing the air flow rate, which would require higher capacity air blowers with increased operational costs, the only option open to us is to increase the air outlet temperature. An equation to describe the air outlet temperature has been previously evaluated within the literature and the following relationship is used to describe this arrangement [29].

$$T_{out} = T_{Mold} - (T_{Mold} - T_{in}) \cdot e^{-h \cdot A/m \cdot c_p} \tag{5.2}$$

Where the Mold temperature, T_{Mold}, is assumed uniform, the air enters at T_{in}, exits at T_{out}, the average convective coefficient is given as h, the convective surface area as A, the mass flow of air as m and the specific heat of air as c_p

The MathCAD code developed takes in air properties versus temperature in a matrix for cubic spline interpolation. The mold conditions and air inlet conditions are given as input.

المنارة للاستشارات
www.manaraa.com

$$\rho_a = \begin{bmatrix} \rho \\ \rho_2 \\ \rho_3 \\ \rho_4 \\ \rho_5 \end{bmatrix} \frac{kJ}{kgK}, \rho_a \Rightarrow Density \tag{5.3}$$

$$C_a = \begin{bmatrix} C_1 \\ C_2 \\ C_3 \\ C_4 \\ C_5 \end{bmatrix} \frac{kJ}{kgK}, C_a \Rightarrow SpecificHeat \tag{5.4}$$

$$K_a = \begin{bmatrix} K_1 \\ K_2 \\ K_3 \\ K_4 \\ K_5 \end{bmatrix} \frac{watt}{mK}, K_a \Rightarrow ThermalConductivity \tag{5.5}$$

$$T_a = \begin{bmatrix} T_1 \\ T_2 \\ T_3 \\ T_4 \\ T_5 \end{bmatrix} K, T_a \Rightarrow AirTemperature \tag{5.6}$$

$$, \Pr = \begin{bmatrix} \Pr_1 \\ \Pr_2 \\ \Pr_3 \\ \Pr_4 \\ \Pr_5 \end{bmatrix}, \Pr \Rightarrow \Pr andtl'sNumber \tag{5.7}$$

المنارة للاستشارات
www.manaraa.com

$$\mu_a = \begin{bmatrix} \mu_1 \\ \mu_2 \\ \mu_3 \\ \mu_4 \\ \mu_5 \end{bmatrix}, \mu \Rightarrow Kinematic Vis\cos ity \tag{5.8}$$

5.2.2 Fin Analysis

The size of the fins to be used was also an important criterion as it affected the heat transfer rate due to changes in the air flowing through the cooling passage and also making considerable impact on the losses due to friction. Hence, the efficiency of the fins was calculated, the fin with efficiency of approximately 90% or more having the most positive impact on the heat transfer rate was chosen. The available fin sizes from Small Parts in Miami varied in thickness as follows: 0.016in, 0.025in and 0.032 in. These sizes were then checked for efficiency and heat transfer enhancement. The fin thickness is selected to optimize the conflicting requirements of maintaining adequate air flow the cooling passage and effectively augmenting heat transfer.

The fin is inserted in the outer row of cooling holes. To calculate the efficiency of the fin the problem was simplified and compared to a fin representing an insulated tip as shown in the figure 5.2.

المنارة للاستشارات
www.manaraa.com

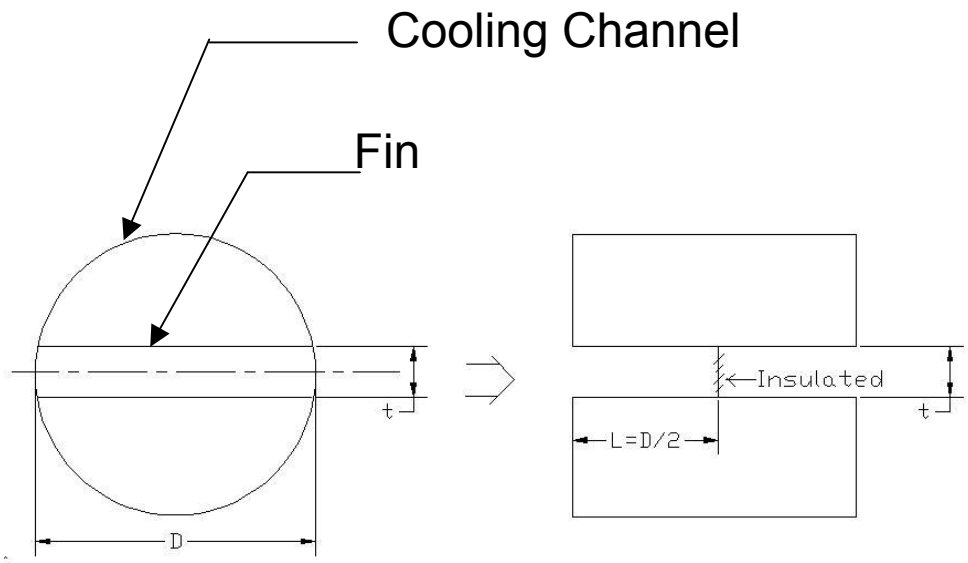

Figure 5.2 Schematic Representation of the Fin inside the Air Cooling Channel

The efficiency of an insulated tip as shown above is given as follows [29]

$$\eta = \frac{\tanh mL}{mL} \tag{5.9}$$

Where, $m = \sqrt{\frac{hP}{KA}}$ (5.10)

Where, P= wetted perimeter = 2Z and Surface area=Zt

Z=the length of the fin

t=thickness of the fin

5.2.3 Calculations for Fin Efficiency

Let us assume the velocity of air flowing through the cooling passages as $v = 300\,fps$.

The diameter of the cooling passage, $d = \frac{9}{32}in$.

المنارة للاستشارات
www.manaraa.com

Properties of air

$k = 0.0338 \frac{watt}{m.K}$; $\Pr = 0.69$; $\mu_w = 3.388 \times 10^{-5} Newton.\frac{\sec}{m^2}$

$\rho = 0.8711 \frac{kg}{m^3}$; $\mu = 0.000023 Newton.\frac{\sec}{m^3}$

Where K= Thermal conductivity

μ_w = Kinematic viscosity

Pr = Prandtl's Number

ρ = Density

Thermal conductivity of fin, $k_f = 110\ watt\ m^{-1}K^{-1}$

Hydraulic Diameter $D = \pi \frac{d}{(\pi + 2)}$ (5.11)

Thickness of the fin $t = 0.016\ in$

$\mathrm{Re} = v\ D \frac{\rho}{\mu}$ (5.12)

$\mathrm{Re} = 1.512 \times 10^4$

The Nusslet's Number can be calculated as follows [29]

$Nu = 0.027\ RE^{0.8}\ \Pr^{0.33} \frac{\mu}{\mu_w} = 77.586$ (5.13)

The heat transfer coefficient $h = Nu \frac{k}{D}$ (5.14)

$\therefore Nu = 105.805 \frac{BTU}{hr.ft^2.R}$

المنارة للاستشارات
www.manaraa.com

Therefore the efficiency of the fin for the given thickness is,

$$\eta = \frac{\tanh\left[\left(2.\frac{h}{k_f t}\right)^{0.5} \frac{d}{2}\right]}{\left(2\frac{h}{k_f t}\right)^{0.5} \frac{d}{2}} \tag{5.15}$$

$\therefore \eta = 0.899$

5.2.4 Results of Fin Analysis

Similar calculations are done for the other two fin sizes available. The heat transfer rate is calculated with the MathCAD code and the results of the calculations are tabulated in table 5.1.

Table 5.1 Results of Fin Analysis

Fin Thickness, t(In)	Efficiency, η (%)	Heat Transfer Q(BTU/Hr)
0.016	89.99	1262
0.025	93.33	1155
0.032	94.70	1070

The graph in figure 5.3 clearly indicates that as the thickness of the fin increases the heat transfer rate decreases, this is due to the fact that the increasing fin thickness hampers the air flow through the cooling channels of the mold hence reducing the amount of heat transferred from the mold to the cooling air.

المنارة للاستشارات
www.manaraa.com

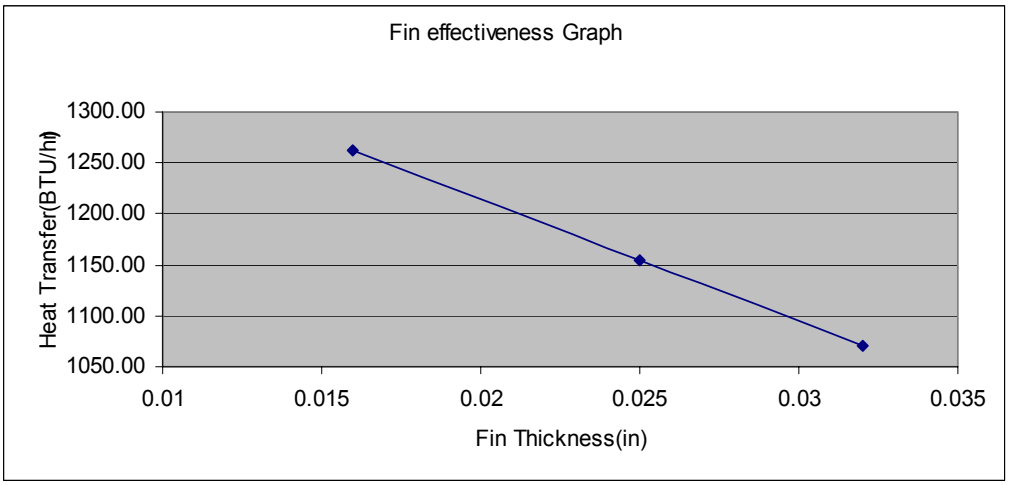

Figure 5.3 Varying Heat Transfer Rate with Fin Thickness

From the above results it was concluded that the thickest fin even though was high in efficiency failed to achieve the desired result, which is gain in heat transfer. Hence, the fin with a thickness if 0.016 in was chosen for further analysis.

5.3 Parametric Analysis

The pressure drop in the cooling passage as per the date acquired from ACG is 60in of H_20. The cold fluid properties are determined from the cubic spline curve fits. The cold fluid temperature is not prescribed in this case and is hence solved here by trail and error using the code. In this program we have taken into consideration the change in fluid properties with temperature, the efficiency of the fin and analyze the problem with a fixed pressure drop and for constant wall temperature. The use of hydraulic diameter is made for calculating the Nusselt's number.

The code is then run several times with different values of cooling passage diameters and fins. The output of the program gives the flow rate and the heat transfer

المنارة للاستشارات
www.manaraa.com

rate which are the most important parameters of this analysis. The results obtained from the runs are tabulated according to the number of fins used per cooling passage are tabulated in table 5.2

Table 5.2 Results of Increasing Air Coolant Passage Diameter in Finned and Un-Finned Passages

Type of fin used	¼ Inch Coolant Passage		9/32 Inch Coolant Passage	
	Air Flow lb_m/hr	Total Heat Transfer BTU/hr	Air Flow lb_m/hr	Total Heat Transfer BTU/hr
No Fin	26.96	2187	36.06	2605
Strip Fin	18.07	2336	24.90	2958
Tri–Star Fin	15.05	2156	21.02	2862

While the results shown here were found for Mold temperatures of 800°F, results are not strongly affected by variations in temperature. The critical parts of this analysis were repeated at Mold temperatures ranging between 650 and 950°F with results shown in Table 5.3. Clearly variations in Mold temperature do not produce significant changes in the relative improvements in heat transfer or air flow rates.

Table 5.3 Effects of Variations in Body Temperature on Existing and Prototype Molds

	¼ Inch Coolant Passage, Unfinned		9/32 Inch Coolant Passage, Finned		Change, %	
Mold Wall Temp.	Air Flow lb_m/hr	Total Heat Transfer BTU/hr	Air Flow lb_m/hr	Total Heat Transfer BTU/hr	Total Heat Transfer	Air Flow
650 °F	28.47	1763	26.57	2408	36.6	-6.7
800 °F	26.96	2187	24.90	2958	35.3	-7.6
960 °F	25.61	2589	23.43	3470	34.0	-8.6

المنارة للاستشارات
www.manaraa.com

5.4 Axial Distribution of Cooling through Constant Temperature Cooling Passage

The basic flaw with the current mold relates to the cooling near the shoulder region of the bottle, hence it was necessary to compute the relative cooling at various mold sections. The change in the relative cooling at the various mold section is monitored with the MATHCAD code .Table 5.5 shows the amount of heat removed from the mold by the cooling air as it passes through the cooling channel.

Table 5.4 Relative Cooling at Various Mold Sections

Frictional Axial Distance along Mold	Fraction of Energy Transferred Below Elevation			
	¼" hole no Fin	9/32" hole No Fin	¼" hole Strip Fin	9/32" hole Strip Fin
0.1	0.683	0.704	0.609	0.62
0.2	0.729	0.745	0.682	0.686
0.3	0.771	0.784	0.745	0.744
0.4	0.811	0.82	0.8	0.796
0.5	0.848	0.855	0.847	0.841
0.6	0.883	0.887	0.887	0.881
0.7	0.915	0.918	0.922	0.917
0.8	0.945	0.947	0.952	0.948
0.9	0.974	0.974	0.978	0.976
1.0	1	1	1	1

المنارة للاستشارات
www.manaraa.com

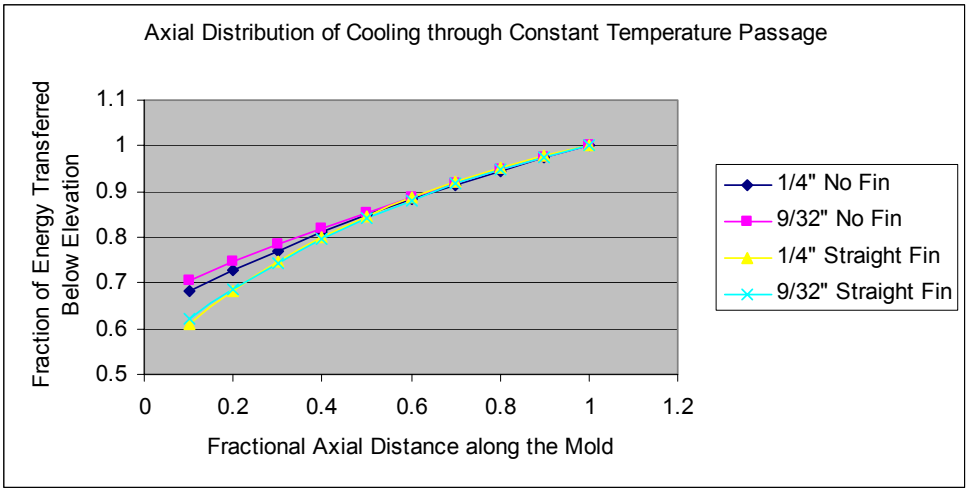

Figure 5.4 Axial Distribution of Cooling through Constant Temperature Passage

5.4 Conclusions

- As the number of fins increases the air flow rate decreases hence reducing the heat transfer rate hence, no consideration is given to more elaborate fin arrangements.
- The best possible combination from the above results is the one where the cooling channel diameter is 9/32 in and the straight fin is used.
- The increase in the amount of heat transferred between the standard mold and the new design is 35.3%.
- The decrease in the cooling air mass flow rate between the standard mold and the new design is -7.6%.

المنارة للاستشارات
www.manaraa.com

CHAPTER 6

ANALYTICAL TRANSIENT ANALYSIS

The MATHCAD code used in the previous chapter was used to evaluate the cooling channel diameter and the fin dimensions for the maximum possible heat transfer rate. This particular chapter deals with the analytical solution to determine the depth of the transient heat penetration in the glass and the mold.

6.1 Formulation of Semi-Infinite Solid Problem

The problem can be simplified and represented as follows in Figure 6.1

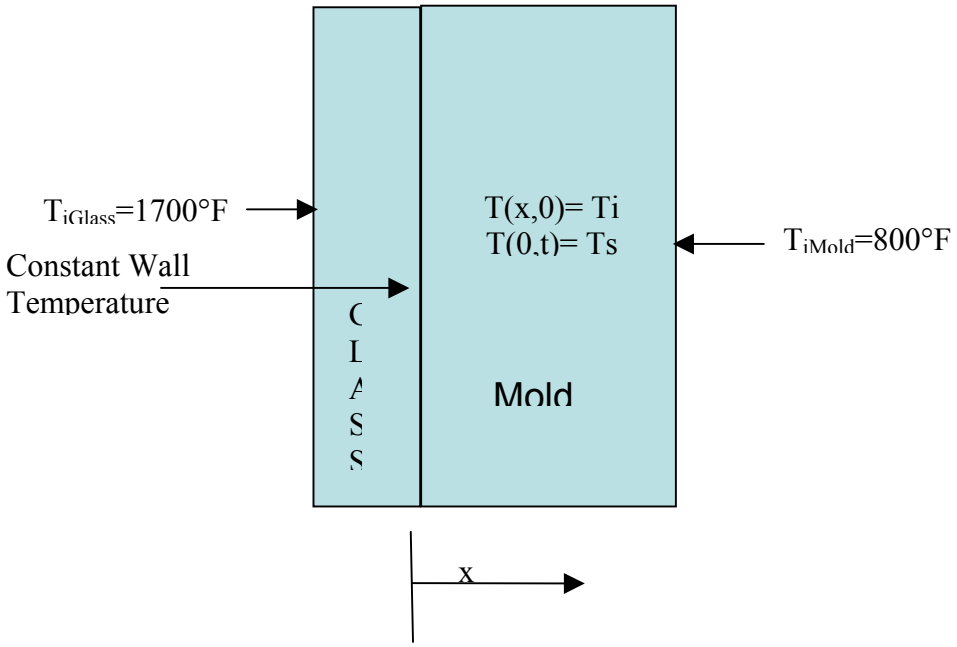

Figure 6.1 Semi Infinite Solid with Constant Wall Temperature

المنارة للاستشارات
www.manaraa.com

The heat equation for transient conduction in a semi-infinite solid is given by

$$\frac{\partial^2 T}{\partial x^2} = \frac{1}{2}\frac{\partial T}{\partial t} \tag{6.1}$$

The initial conditions are given as follows,

$$T(x,0) = T_i \tag{6.2}$$

In this problem we have a constant wall temperature; the surface heat flux for this particular condition is given as [29],

$$q_s''(t) = \frac{k(T_s - T_i)}{(\pi\alpha t)^{\frac{1}{2}}} \tag{6.3}$$

We also know that for this particular case [29],

$$\frac{\mathrm{T(x,t) - T_s}}{\mathrm{T_i - T_s}} = erf\left(\frac{x}{2\sqrt{\alpha t}}\right) \tag{6.4}$$

6.2 Calculations

Here we wish to find out how far the heat penetrates (x) into the glass and into the mold within the given 3 seconds time interval.

The surface heat flux,

$$q_s''(t) = \frac{k(T_s - T_i)}{(\pi\alpha t)^{\frac{1}{2}}} \tag{6.5}$$

Where $\alpha = \dfrac{k}{\rho C_p}$ (6.6)

$$\therefore q_s''(t) = \frac{(T_s - T_i)}{(\pi t)^{\frac{1}{2}}}\sqrt{k\rho C_p} \tag{6.7}$$

المنارة للاستشارات
www.manaraa.com

Here we also assume that,

The amount of heat lost by glass = the amount of heat gained by the mold

$$\therefore \sqrt{\left(\frac{k\rho C_p}{\pi t}\right)}_{glass}(T_s - T_i)\xi = \sqrt{\left(\frac{k\rho C_p}{\pi t}\right)}_{mold}(T_s - T_i)(1-\xi) \tag{6.8}$$

Where $\xi = \dfrac{T_{iG} - T_s}{T_{iG} - T_{iM}}$ is the temperature distribution constant (6.9)

$$\therefore \xi\left[\sqrt{(k\rho C_P)_{Glass}} + \sqrt{(k\rho C_P)_{Mold}}\right] = \sqrt{(k\rho C_P)_{Mold}} \tag{6.10}$$

The following properties are known both for glass and for the mold.

Glass properties

Thermal conductivity, $k_g = 2.3\times10^{-5}\dfrac{BTU}{\sec.in.F}$

Density, $\rho_g = 0.0788\dfrac{lb}{in^3}$

Specific heat, $C_{pg} = 0.179\dfrac{BTU}{lb.F}$

Mold properties

Thermal conductivity, $k_g = 5.3489\times10^{-4}\dfrac{BTU}{\sec.in.F}$

Density, $\rho_g = 0.3081\dfrac{lb}{in^3}$

Specific heat, $C_{pg} = 0.119\dfrac{BTU}{lb.F}$,

Initial temperature of the glass, $T_{iG} = 1700°F$

Initial temperature of the mold, $T_{iM} = 800°F$

المنارة للاستشارات
www.manaraa.com

Solving eqn. 6.10 we get

ξ=0.886

Solving eqn. 6.9

The interface temperature, $T_s = 814°F$,

Solving eqn.6.4 for heat penetration into the glass we get,

x=0.238 inches

The distance penetrated by heat into the glass in a time interval of 3 seconds is x=0.238 inches.

Solving eqn.6.4 for heat penetration into the glass we get,

x=0.711 inches

The distance penetrated by heat into the glass in a time interval of 3 seconds is x=0.711 inches.

6.3 Plotting Transient Temperature Distribution Profiles for Glass and Mold

The calculations were done for the temperature distribution in the glass and the mold depending upon the time and the location.

Table 6.1 Variation in the Temperature Distribution depending on the Location and Time for the Glass

Distance in the solid x (in)	Glass Temperature T(x,t) Degree F		
	Time, t=1 sec	Time, t=2 sec	Time, t=3 sec
0.06	1407	1242	1156
0.12	1164	1563	1475
0.18	1698	1674	1631
0.237	1700	1697	1684

المنارة للاستشارات
www.manaraa.com

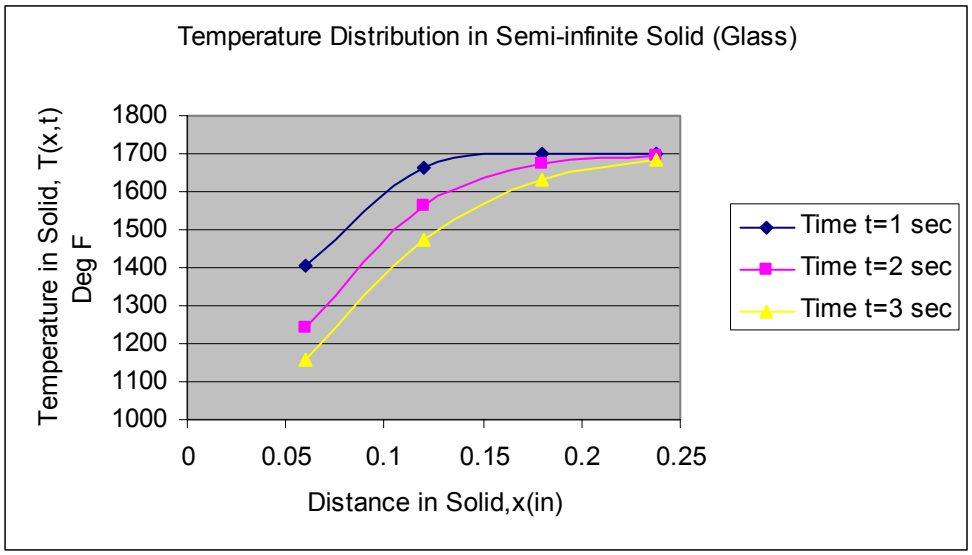

Figure 6.2 Transient Temperature Distribution in Semi Infinite Solid (Glass)

Table 6.2 Variation in the Temperature Distribution depending on the Location and Time for the Mold

Distance in the Solid x (in)	Mold Temperature T(x,t) Degree F		
	Time, t=1 sec	Time, t=2 sec	Time, t=3 sec
0.711	700	701	702
0.534	700	703	708
0.356	704	716	726
0.178	725	752	762

المنارة للاستشارات
www.manaraa.com

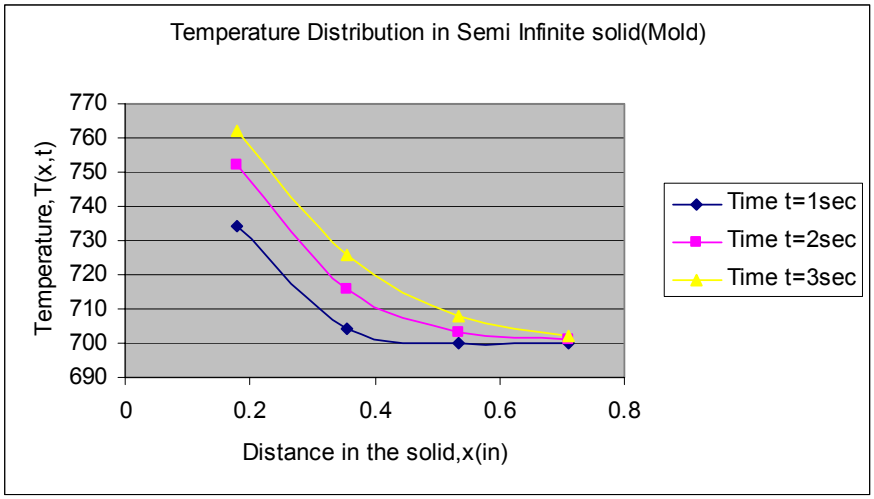

Figure 6.3 Transient Temperature Distribution in Semi Infinite Solid (Mold)

6.4 Surface Heat Flux Calculations

The surface heat flux can be calculated using equation (6.5). The table below gives the values of the heat flux for different times in the molding process.

Table 6.3 Surface Heat Flux Variation with Time

Time, t(sec)	Surface Heat	Drop in Heat Flux with time
0.5	1450	--
1.0	1025	425
1.5	836	189
2.0	724	112
2.5	648	76
3.0	591	57

المنارة للاستشارات
www.manaraa.com

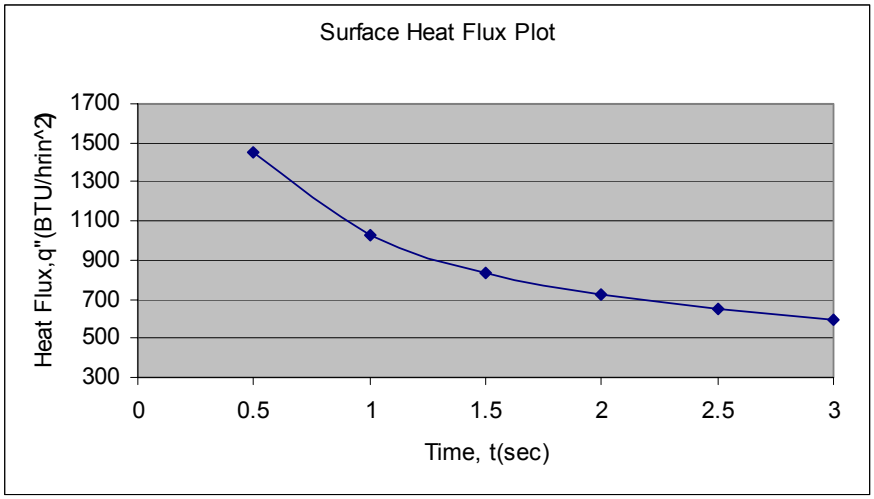

Figure 6.4 Plot of Surface Heat Flux with Time

6.5 Conclusions

- The graphs indicate a uniform temperature profile in the glass and the mold
- The depth of heat penetration shows that the interior surface of the glass is cooling.
- The surface heat flux goes on decreasing with time; this implies that the cooling will not the hampered considerably, if the amount of time allowed for the glass to cool is reduced.

المنارة للاستشارات
www.manaraa.com

CHAPTER 7

MATHEMATICAL MODELING OF THE PROBLEM

The thermal analysis of the mold consisted of the following steps

- Determining the problem domain - nonlinear transient analysis.
- Creating the 2D model of the mold.
- Creating a finite element mesh.
- Applying boundary conditions.
- Setting initial conditions.
- Setting the thermal analysis parameters.
- Solving the problem.
- Post processing the results.

The thermal analysis was solved by numerical simulation using ANSYS. PLANE 55 element type was used in this analysis to mesh the model. These elements were used for calculations of temperature distribution in regions, the glass and the mold. The problem was defined by the laws of conservation of energy. These laws were expressed in terms of partial differential equations, which were discretized with finite element based techniques.

المنارة للاستشارات
www.manaraa.com

Assumptions made in the analysis are as follows

- The glass and the mold are in perfect thermal contact with each other.
- The glass and the mold are at individual uniform temperatures at the beginning of the analysis.

7.1 Governing Equations and Modeling

The glass parison comes in contact with the mold for a brief period of 3 seconds, during this time the parison is blown into the final product and the cooling takes place as air flows through the cooling channels. This situation is described by the equations stated below and numerical simulation software, ANSYS is used to get the solution. The schematic drawing of the mold cross section which is to be analyzed is shown in fig 7.1

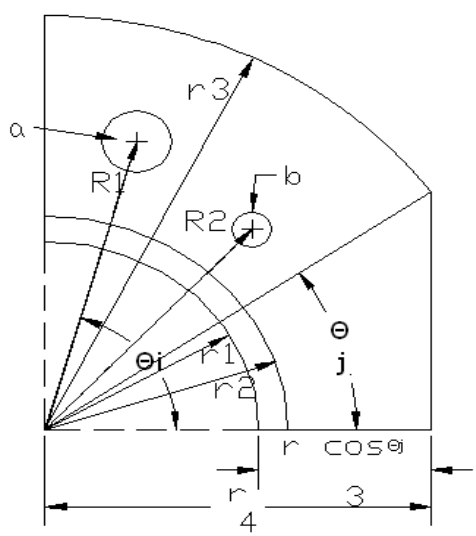

Figure 7.1 Two Dimensional Model of the Mold

المنارة للاستشارات
www.manaraa.com

The temperature field of the considered domain as a function of space and time can be obtained by solving the heat-conduction equation. The equation in two-dimensional Cartesian coordinates (x, y) is shown in equation (7.1). The temperature depends on space coordinates and time, i.e.

$$T = T(x, y, t) \tag{7.1}$$

The density ρ, the specific heat capacity, c, and the thermal conductivity, k, depend on temperature

$$\frac{\partial}{\partial x}\left(k\frac{\partial T}{\partial x}\right) + \frac{\partial}{\partial y}\left(k\frac{\partial T}{\partial y}\right) = \rho c\frac{\partial T}{\partial t} \tag{7.2}$$

To complete the physical model the above equations are subject to the following boundary and initial conditions.

Boundary Conditions:

For $0 < t \leq 3$

$$\begin{aligned} &\theta = 0, r_1 \leq r \leq r_4 \\ \text{At } &\theta = 90, r_1 \leq r \leq r_3 \\ &0 \leq \theta \leq 90, r = r_1 \end{aligned}$$

المنارة للاستشارات
www.manaraa.com

$$\frac{\partial T}{\partial r} = 0 \tag{7.3}$$

This boundary condition applies to all the cooling channels and the fins that provide convection.

At $r = R_1, \theta = \theta_i$ where i changes for different cooling channel location for the inner row of holes

Also at $r = R_1, \theta = \theta_i$, where i changes for different cooling channel location for the outer row of holes

$$\begin{aligned} &at, \bar{r} = R_1 + \bar{a} \\ &\bar{r} = \bar{R}_2 + \bar{b} \\ &-k\frac{\partial T}{\partial a} = h(T - t) \end{aligned} \tag{7.4}$$

At,

$$r = r_3, \theta_j \le \theta \le 90$$

$$-k\frac{\partial T}{\partial a} = h(T - t) \tag{7.5}$$

For,

المنارة للاستشارات
www.manaraa.com

$0 \le \theta \le \theta_j, x = r_3 \cos\theta_j$

$$\frac{\partial T}{\partial r} = 0 \tag{7.6}$$

The initial conditions for the glass and the mold are as follows

For $t = 0$,

At $r_1 \le r \le r_{2,} 0 \le \theta \le 90$

$$T_i = 1700^{o}F \tag{7.7}$$

For $t = 0$

At $r_2 \le r \le r_3, \theta_j \le \theta \le 90$

$$T_i = 800^{o}F \tag{7.8}$$

7.2 Finite Element Models

Most of the heat removed from the glass is transported from the mould by cooling air in the axial channels. The heat flux is large in the radial direction compared to the flux in the circumferential and the axial directions. The model is axi-symmetric and the cross-section of the mould is projected on the radial section of the two-dimensional model. For simplicity and to reduce the time of the analysis only a quarter of the mold was analyzed

المنارة للاستشارات
www.manaraa.com

taking into account the symmetry of the mold. The two-dimensional model is presented in Figure 7.2

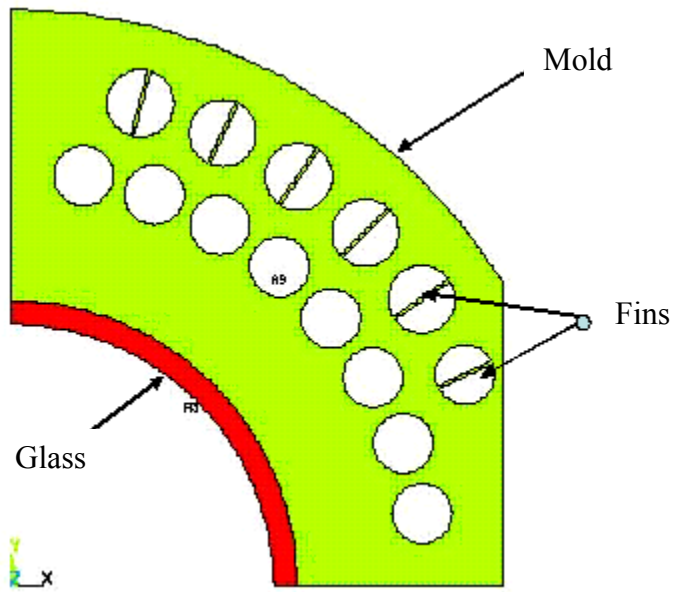

Figure 7.2 Two Dimensional Finite Element Model of the Mold

The cooling channels are modeled by inserting convective boundary conditions on the periphery of the cooling holes and fins as shown in Figure 7.2. On the outside of the mould a convective boundary condition is used. ANSYS solves the above equations with Newton-Raphson method. In this case the full Newton-Raphson method is employed to calculate the solution.

المنارة للاستشارات
www.manaraa.com

CHAPTER 8

RESULTS OF NUMERICAL SOLUTION

As mentioned earlier the heat conductions and convection equations were solved numerically using ANSYS. The equations described in the last chapters were solved numerically to predict the amount of heat transferred from the glass to the mold and from the mold to the cooling air flowing through the cooling channels.

As per the results obtained in the Mathcad code the mold was analyzed for the following cooling channel diameters: 8/32 in and 9/32 in with straight fin inserted in the outer row of cooling channels axially thorough the length of the mold. The temperature distributions was observed in each of the cases for the mold and for the glass to analyze the maximum cooling that is attained by increasing the cooling channel diameter and use of fins in the outer row cooling holes.

The mold was analyzed at 2 critical sections axially, firstly at the shoulder region of the bottle and finally at the neck of the bottle because theses are the areas where the lean occurs the most. The mold analysis was done for the standard mold used by anchor glass and then with the newly designed USF mold. Results obtained from the analysis are then compared on the basis of the temperature distributions obtained from the numerical simulation using ANSYS.

المنارة للاستشارات
www.manaraa.com

8.1 Problem Definition

As shown in the Figure 8.1 the following section was analyzed to simulate for the mold conditions around the shoulder region.

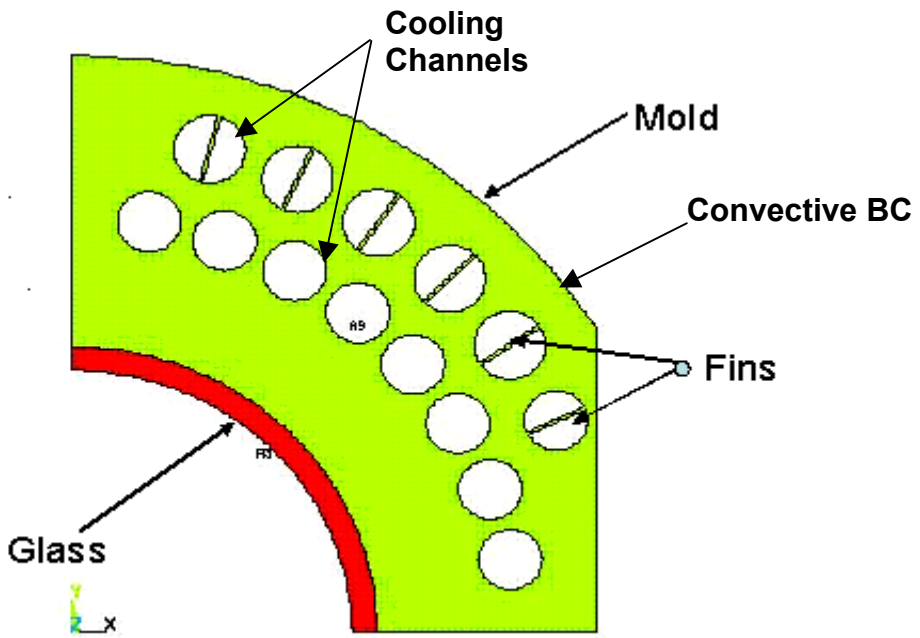

Figure 8.1 Mold Cross Section at the Shoulder

The glass parison at a temperature of 1700 ºF (apprx.) comes in contact with the mold at 800ºF just before the mold closes. Immediately after that the parison mold is blown to its final shape and cooling air flow through the cooling channels. This entire process last for almost 3 seconds, after which the bottle is taken out of the mold. Here we have made use of ANSYS to simulate this situation.

المنارة للاستشارات
www.manaraa.com

8.2 Results of the Numerical Simulation

The temperature distribution of the glass and the mold for the new design as obtained from ANSYS post processor are plotted in Figure 8.2 through 8.4

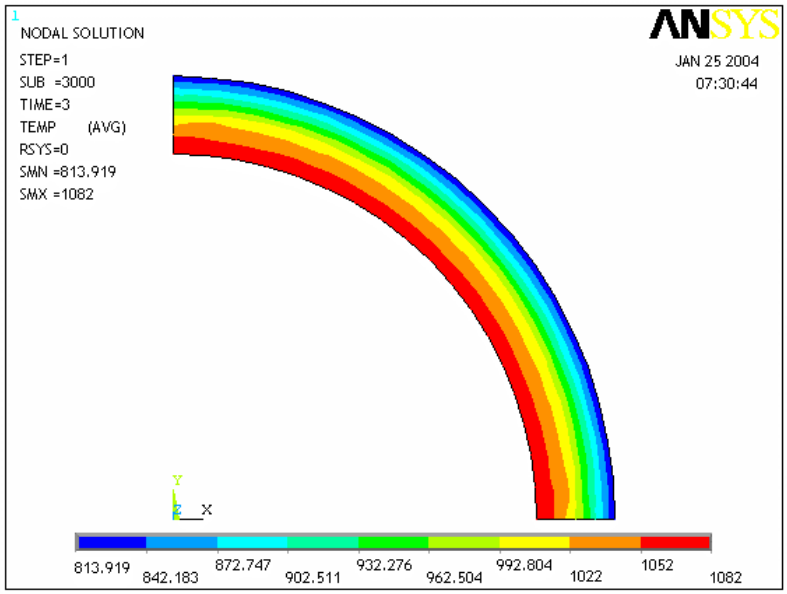

Figure 8.2 Temperature Distribution of Glass at the Neck Section (Degree F)

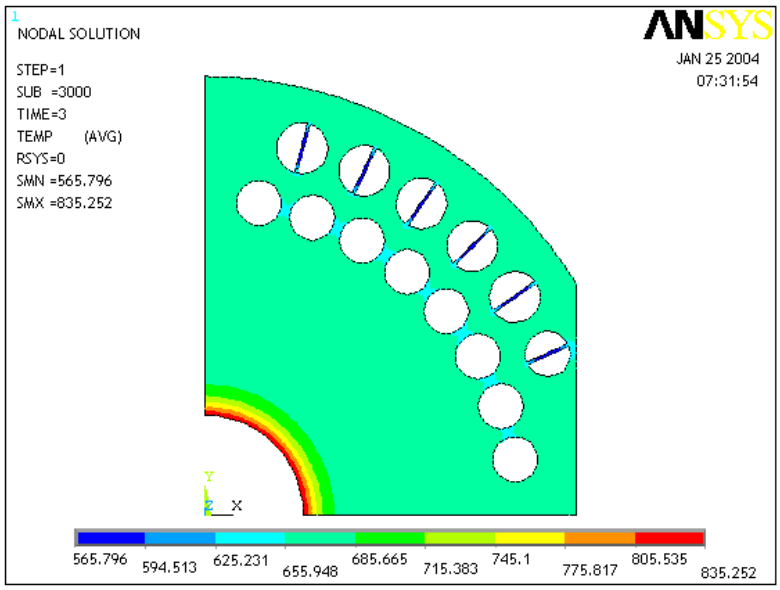

Figure 8.3 Temperature Distribution of Mold at the Neck Section (Degree F)

المنارة للاستشارات
www.manaraa.com

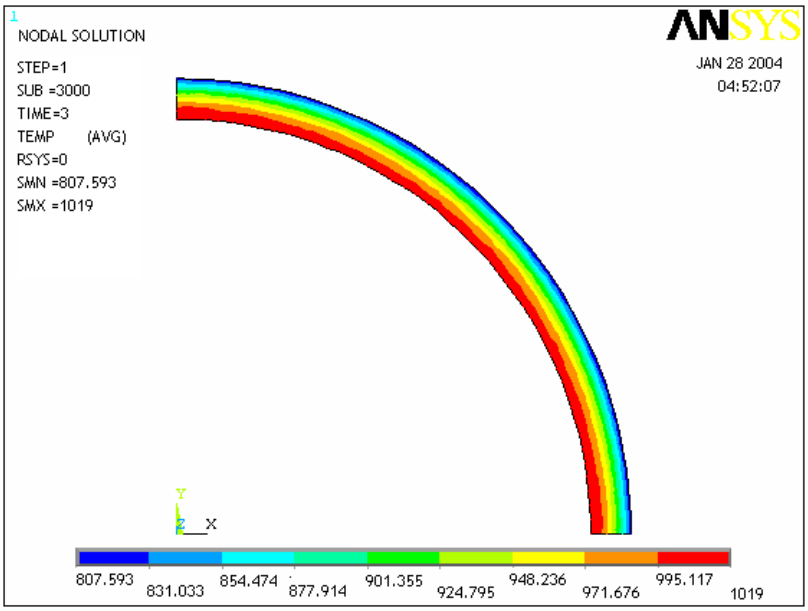

Figure 8.4 Temperature Distribution of Glass at the Shoulder Cross Section (Degree F)

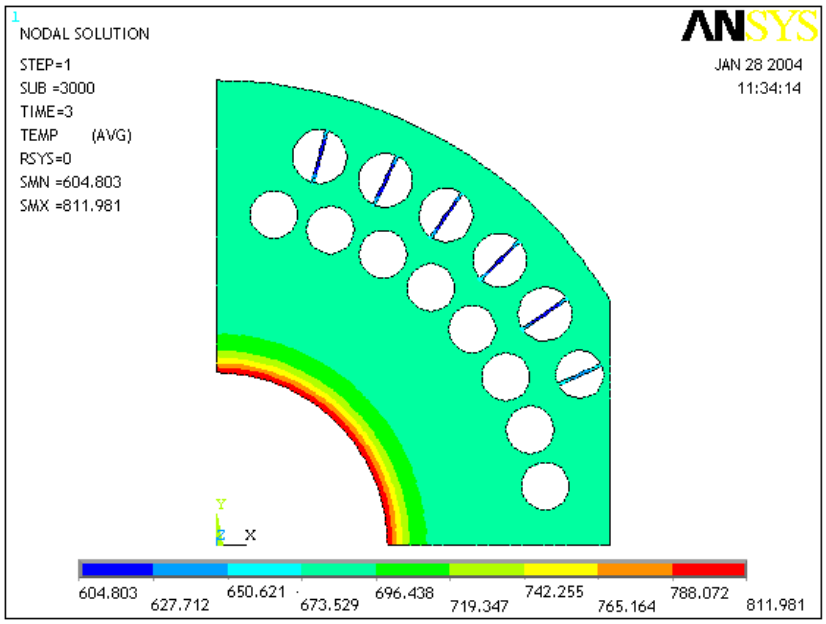

Figure 8.5 Temperature Distribution of Mold at the Shoulder Cross Section (Degree F)

المنارة للاستشارات
www.manaraa.com

The temperature distribution of the glass and the mold for the existing anchor mold as obtained from ANSYS post processor are plotted in fig 8.6 through 8.9

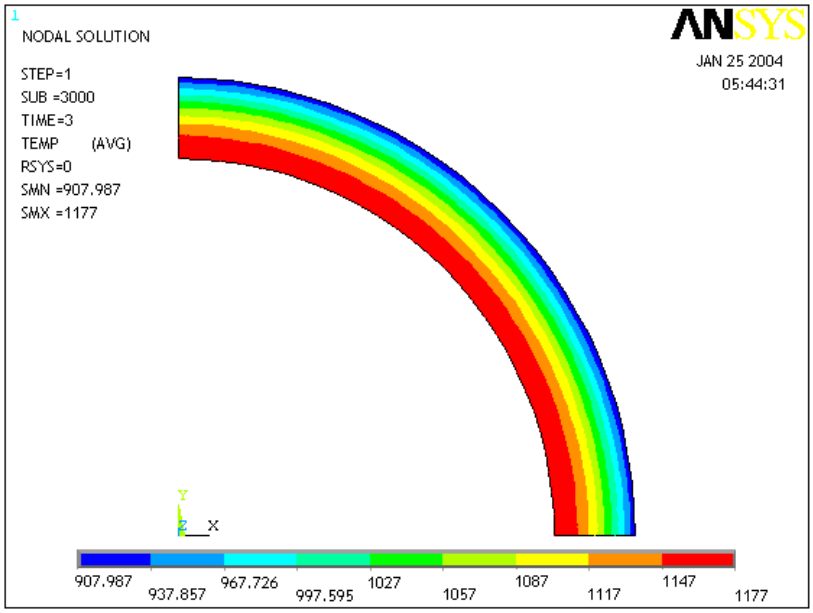

Figure 8.6 Temperature Distribution of Glass at the Neck Section (Degree F)

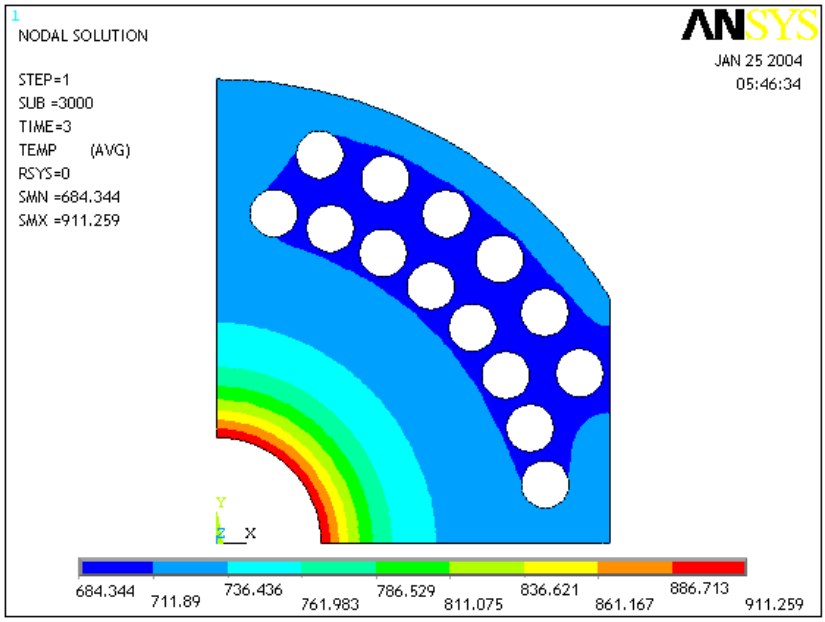

Figure 8.7 Temperature Distribution of Mold at the Neck Section (Degree F)

المنارة للاستشارات
www.manaraa.com

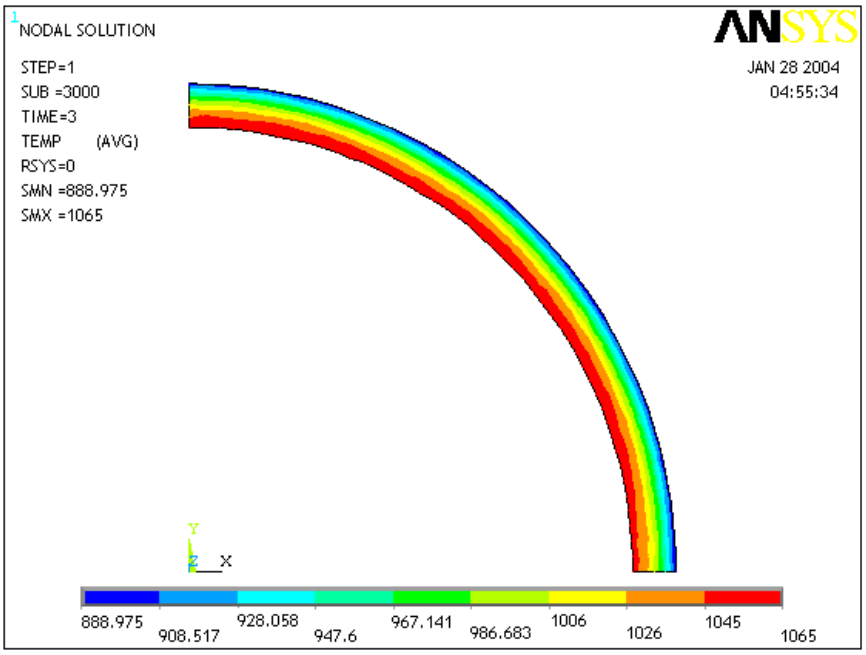

Figure 8.8 Temperature Distribution of Glass at the Shoulder Cross Section (Degree F)

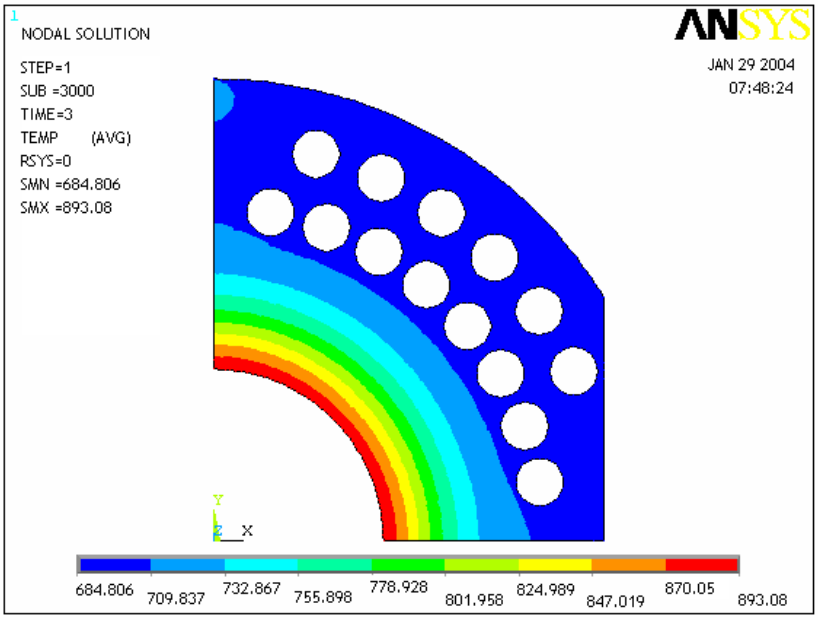

Figure 8.9 Temperature Distribution of Mold at the Shoulder Cross Section (Degree F)

المنارة للاستشارات
www.manaraa.com

8.3 Temperature Distribution Data

The results above can be tabulate in to compare the average temperatures of the glass and the mold at the neck and the shoulder of the standard anchor mold and the newly designed USF mold.

Table 8.1 Comparison of Temperatures between the Anchor Mold and USF Mold

Temperature of Mold at Neck Section				Temperature of Mold at Shoulder			
Anchor Mold		USF Mold		Anchor Mold		USF Mold	
Min	Max	Min	Max	Min	Max	Min	Max
684.334	911.259	565.796	835.252	684.806	893.080	604.803	811.981

Table 8.2 Comparison of Temperatures between Bottles Extracted From the Anchor Mold and USF Mold

Temperature of Glass at Neck Section				Temperature of Glass at Shoulder			
Anchor Mold		USF Mold		Anchor Mold		USF Mold	
Min	Max	Min	Max	Min	Max	Min	Max
907.987	1177	813.919	1082	888.905	1065	831.593	1019

8.4 Conclusions

- From the tables above we can easily conclude that the newly designed USF molds always run at a lower temperature than then existing Anchor molds.

المنارة للاستشارات
www.manaraa.com

- The temperature of the glass coming out of the new USF molds is always less than the glass coming out of the existing Anchor mold.
- The temperature distribution profile on the glass as well as on the mold in the newly designed mold is almost similar to the existing Anchor molds, hence we can be sure that the lower temperature profiles will lead us to a better shaped bottle.
- The difference in temperatures between the inner and the outer row of holes is small showing that the outer rows of holes have been effectively used for cooling.
- The radial pattern of temperature profiles suggest that uniform cooling is obtained.
- The difference between the minimum and the maximum temperatures between the glass extracted from USF molds is always less then that extracted from the Anchor molds suggesting that the reheat that occurs after the glass comes out of the mold will be less in the new molds as compared to the old ones thus achieving better shaped bottles.

المنارة للاستشارات
www.manaraa.com

CHAPTER 9

EXPERIMENTAL RESULTS

As per the results of the **MATHCAD** code and the numerical simulation solution obtained with ANSYS the new molds were manufactured. The test on the new designs was conducted on 11 February, 2004. Three test molds were put on a bank for testing to avoid complications of cooling air supply.

9.1 Measurement of Bottle Temperatures

The bottle temperature was measured at the dead plate and at the light box the former being closer to the mold. Temperature measurements were taken with an infrared thermal imaging camera. The camera is capable of reading thermal profiles over a portion of the bottle and recording these for individual pixels within image or averaging readings over a particular portion of the bottle. All the readings taken were then averaged and a bar graph of the same is shown in Figure 9.1.

Three different tests of the finned mold were conducted. In each test the finned mold passage (USF Mold) represents the centre line in the test group and was evaluated with cooling times set at 60-175 degrees which is operated by a cam that makes 360 degrees in 4 seconds. After the test USF 1 the relative positions of the two molds were interchanged so as to achieve more uniform cooling between the molds,

المنارة للاستشارات
www.manaraa.com

this test is labeled USF 2. The data labeled USF Std, a standard mold was placed in between the two test mold within a single blank.

In each grouping c control is shown as the left line. The control data was taken using a standard mold set with the standard cooling time of 30-195 degrees. On the right hand side of each group is another control sample, a set of standard molds with a cooling time of 60-175 degrees, same as that used in the test mold.

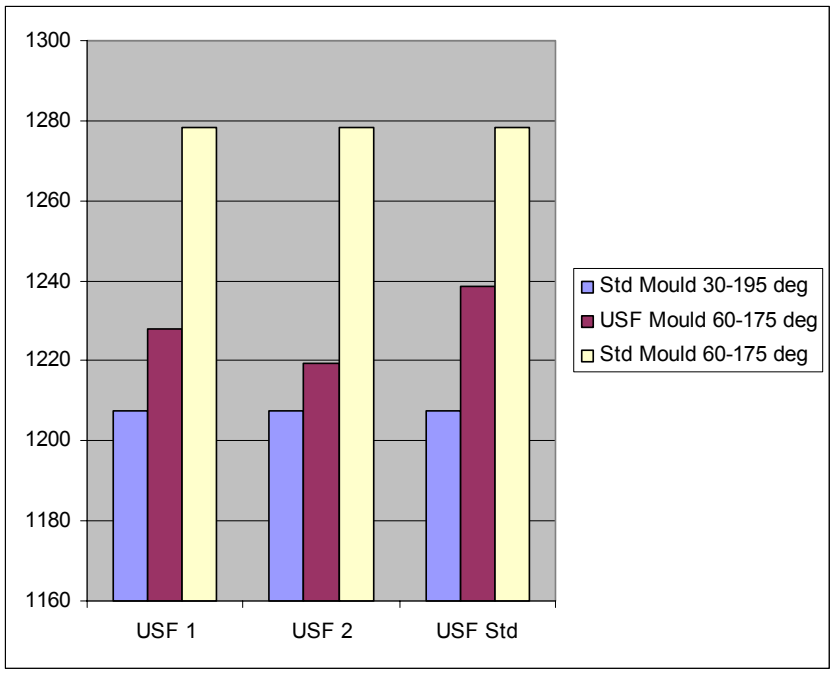

Figure 9.1 Bottle Shoulder Temperatures (Degree F) Measured at Dead Plate

Figure 9.1 represents the readings taken in the shoulder region of the bottle at the dead plate and Figure 9.2 represents the readings taken in the neck region of the bottle at the dead plate respectively. A similar set of temperatures were measured at the light box and results are shown in Figures 9.3 and 9.4, for measurements taken at the shoulder

المنارة للاستشارات
www.manaraa.com

region and the neck region, respectively The initial arrangement used in the USF 1 set of runs resulted in uneven temperatures, the measured shoulder temperatures tending to be low while the temperatures at the neck appeared high. USF 2 test data indicates that the finned Mold design, set at 60 to 175 degrees, consistently achieves between 30 and 75% of the additional cooling effect as when the standard Mold cooling time is increased from 60-175 degrees to 30-195 degrees.

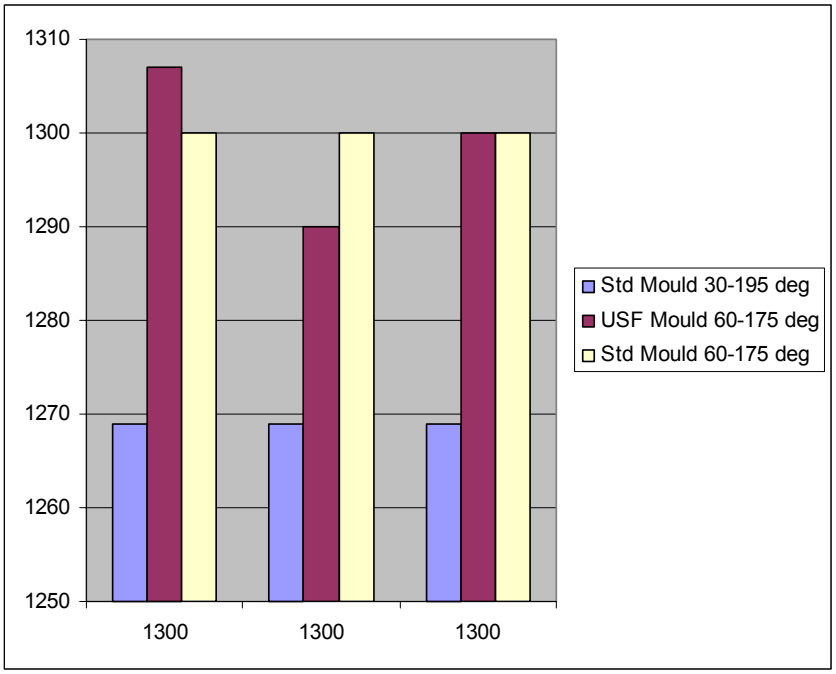

Figure 9.2 Bottle Neck Temperatures (Degree F) Measured at the Dead Plate

9.2 Bottle Lean Data Analysis

Bottle lean was measured at both the shoulder and the neck on 25 to 40 bottles for each of the mold configurations. The shoulder data was taken at a position 4.434 inches from the top of the bottle; the neck data was taken at 0.626 inches from the top. The

المنارة للاستشارات
www.manaraa.com

overall height of the bottle is 9 1/16th inches. The data has been plotted so that the shoulder lean can be compared to the neck lean as a means of establishing where the problem had occurred. If the lean occurred at or near the base, we would expect that the shoulder and neck lean would be in proportion to the distance measured from the base. As measured from the base the shoulder and neck positions were calculated to be at 4.6285 and 8.4375 inches, respecitvely If the bottle were to lean from the base, the neck would lean to a greater angle, the ratio being 1.823. If the lean occurred higher in the bottle, we expect that the neck lean might be considerably greater than shoulder lean.

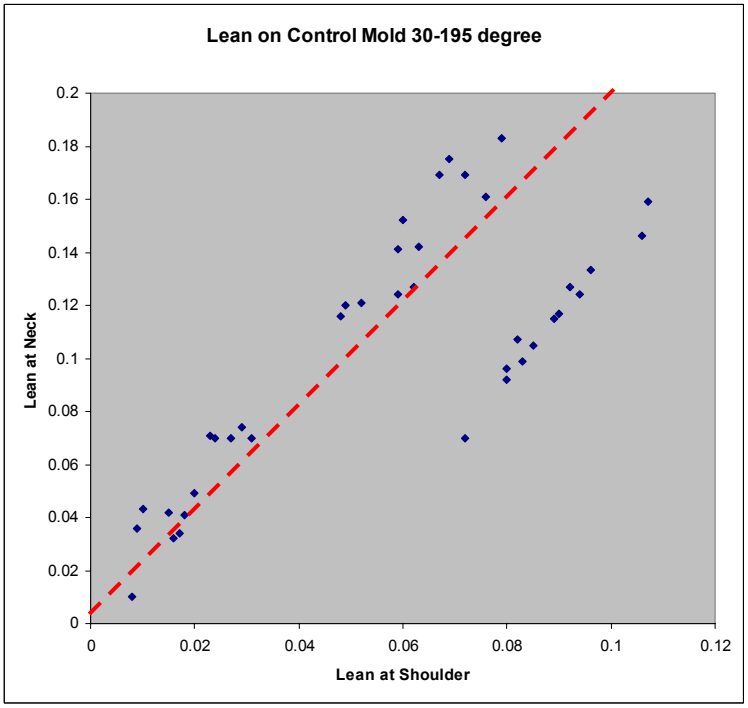

Figure 9.3 Measured Lean (inches) on Control Sample, 30-195° Air Circulation

In Figure 9 we see a plot of this lean data for the control sample, a standard mold with air blowing between 30 and 195 degrees. A heavy dashed line indicates a locus of

المنارة للاستشارات
www.manaraa.com

points where the lean ratio is 2:1. For data above this line we assume that the lean occurred close to the neck, below the line toward the base. It may be observed that the data lie in two distinct groupings, but with the preponderance of data toward the upper grouping indicating that the primary cooling problem is in the neck region. After testing

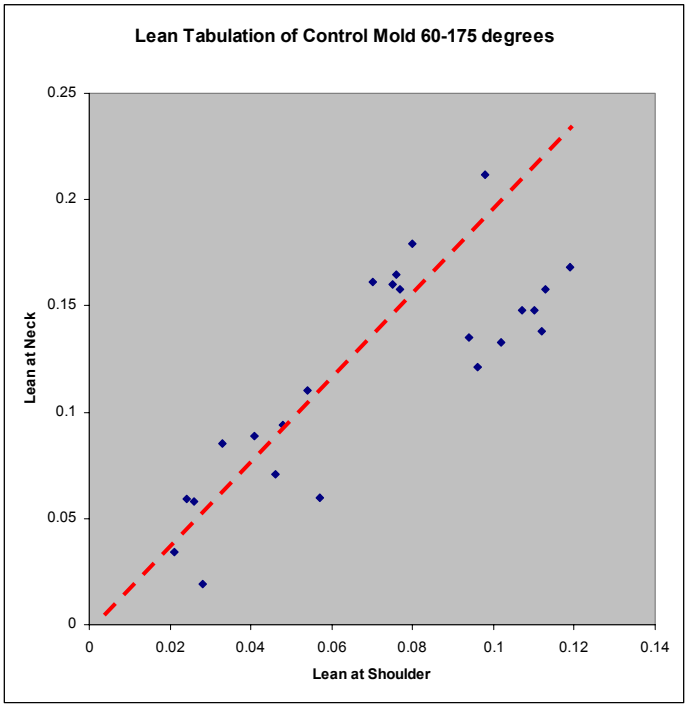

Figure 9.4 Measured Lean (inches) on Control Sample, 60-175° Air Circulation

the Control molds with full air circulation, they were also tested with the reduced air circulation associated with the prototype molds. Measured lean for this test is shown in Figure 11. Patterns appear similar to those with full air flow, again showing two distinct regions of neck lean and base lean. Lean data for the prototype molds is shown in Figures 9.5-9.9. These show a progression of reduced air circulation with initial air flows of between 50 and 195° gradually being reduced to between 70 and 175°.

المنارة للاستشارات
www.manaraa.com

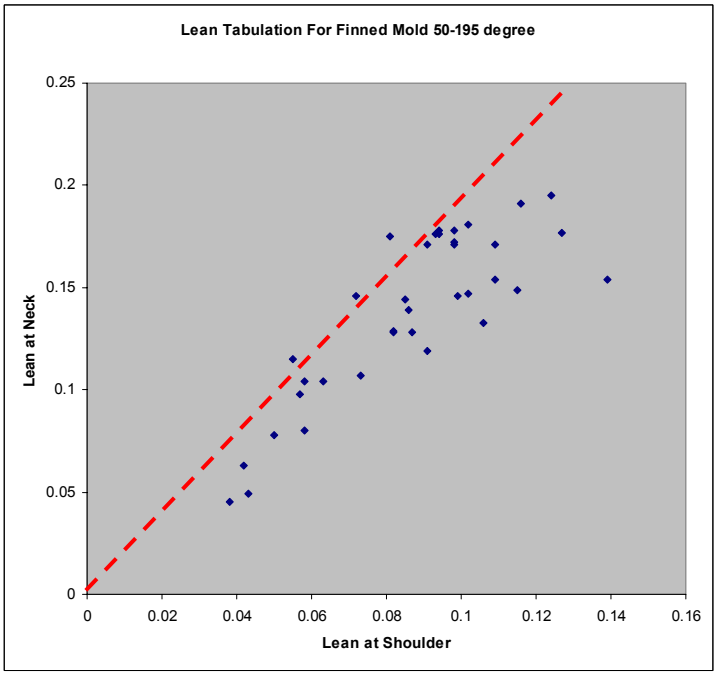

Figure 9.5 Measured Lean (inches) on Prototype Mold, 50-195° Air Circulation

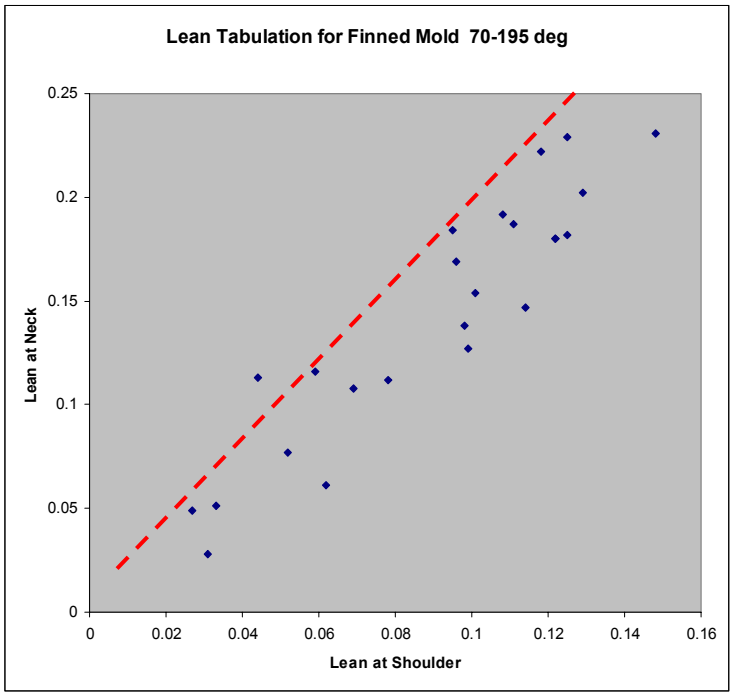

Figure 9.6 Measured Lean (inches) on Prototype Mold, 70-195° Air Circulation

المنارة للاستشارات
www.manaraa.com

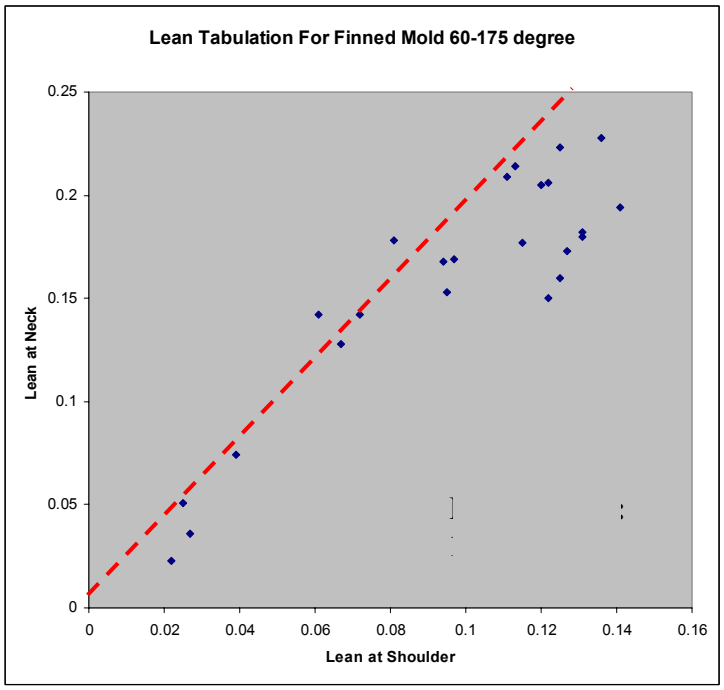

Figure 9.7 Measured Lean (inches) on Prototype Mold, 60-175° Air Circulation

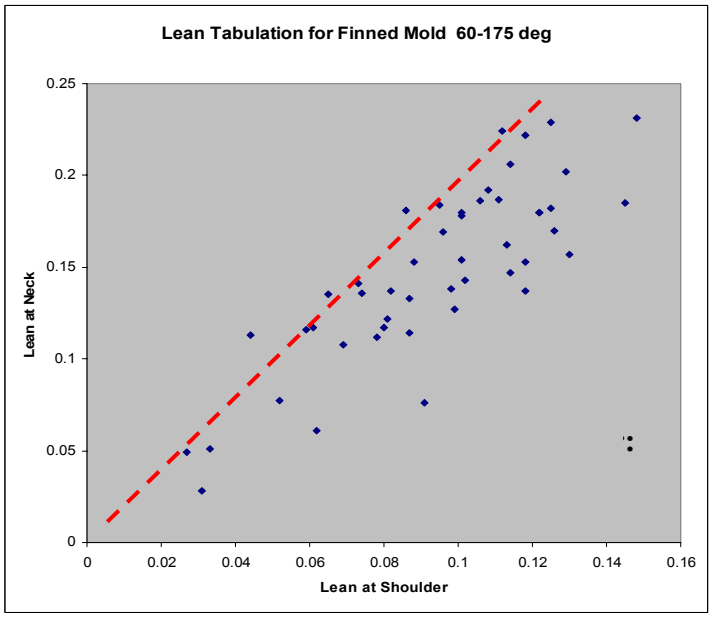

Figure 9.8 Measured Lean (inches) on Prototype Mold, 60-175° Air Circulation

المنارة للاستشارات
www.manaraa.com

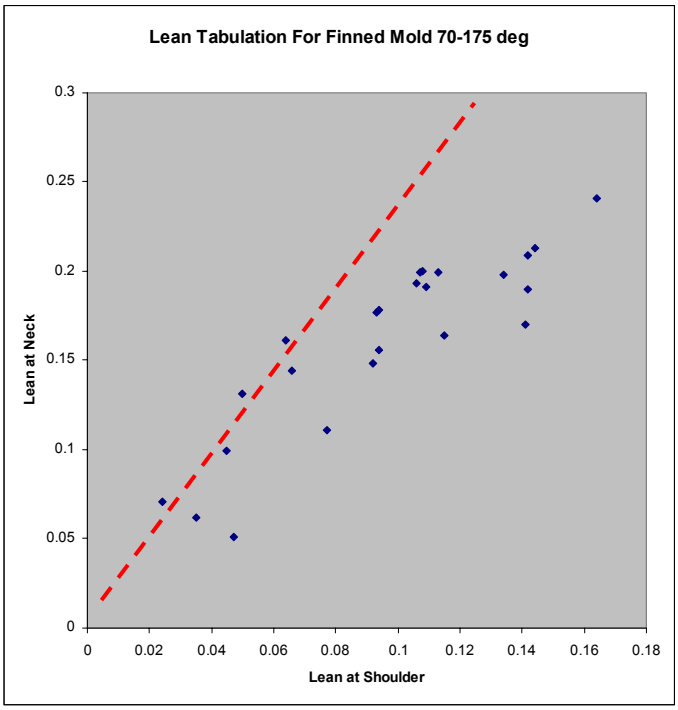

Figure 9.9 Measured Lean (inches) on Prototype Mold, 70-175° Air Circulation

The red line shown on the graph indicates this ratio of the distance between the neck to the base and the shoulder to the base. Data falling on this line would be expected to represent bottles leaning from the base. Data to the lower right of the line represents bottles in which the neck leans disporportionately, an indication that the location of the slumping is above the base. Data lying to the upper left of the curve are thought to indicate cases in which the base has shifted so as to cause the shoulder to have a disporportuante lean.

المنارة للاستشارات
www.manaraa.com

9.3 Mold Temperature Measurements

During the mold test infrared measurements of the mold temperatures were also taken. These have been used to verify the calculated temperature improvements and serve to indicate the degree of progress made in improved mold cooling. Typical comparisons are shown in Figures 17 and 18, indicating the operational mold internal temperatures for the standard mold and the prototype, respectively. The measured average temperatures across the cavity surface are 674 and 488°F, respectively, even given that the prototype mold is being operated with minus 60° cooling.

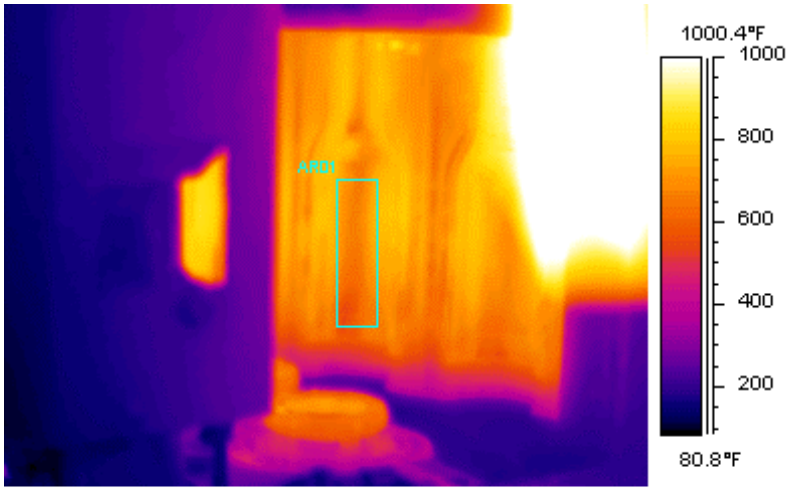

Standard Mold, Full Cooling
674 degrees F

Figure 9.10 Standard Mold Thermal Image during Tests

المنارة للاستشارات
www.manaraa.com

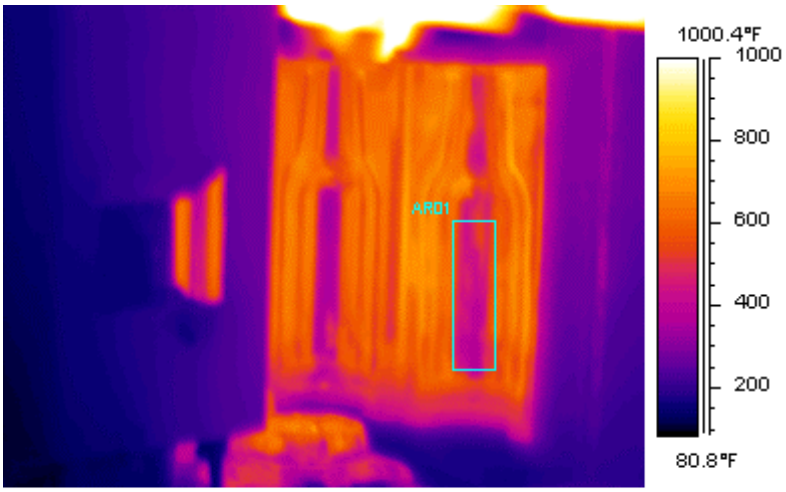

USF Mold minus 60 degree of cooling
488 degrees F

Figure 9.11 Prototype Mold Surface Image during Tests

Figures 9.12 and 9.13 indicate temperatures on the outside surface of the standard and prototype molds. The prototype does not include any horizontal slots so that it clearly stands out on the right. Some care should be exercised in viewing these images in that the hot air exiting from these slots may heat the mold in this area providing a false, high reading. What may be more informative is to look at the smooth regions away from these slits. The prototype mold exhibits a strong blue-purple tone as compared to the very red surface on a standard mold. Temperatures recorded around the lug are 622 and 574°F, respectively.

المنارة للاستشارات
www.manaraa.com

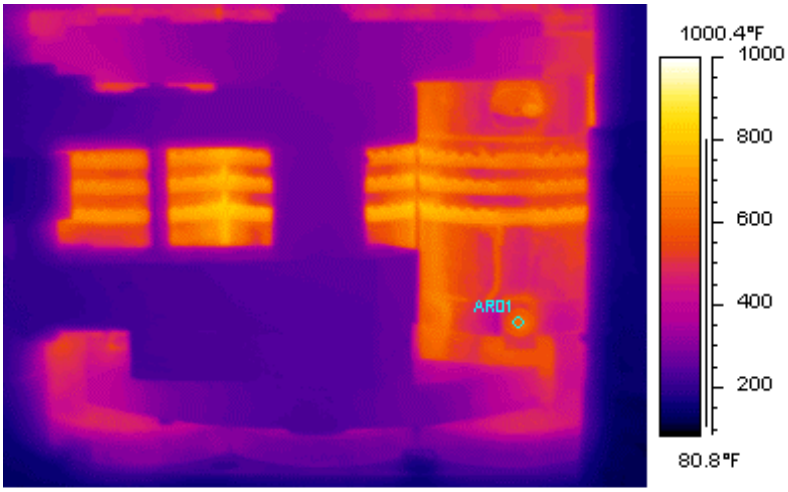

Standard Mold, 60 degrees less cooling
622 degrees F

Figure 9.12 Standard Mold Surface Image during Tests

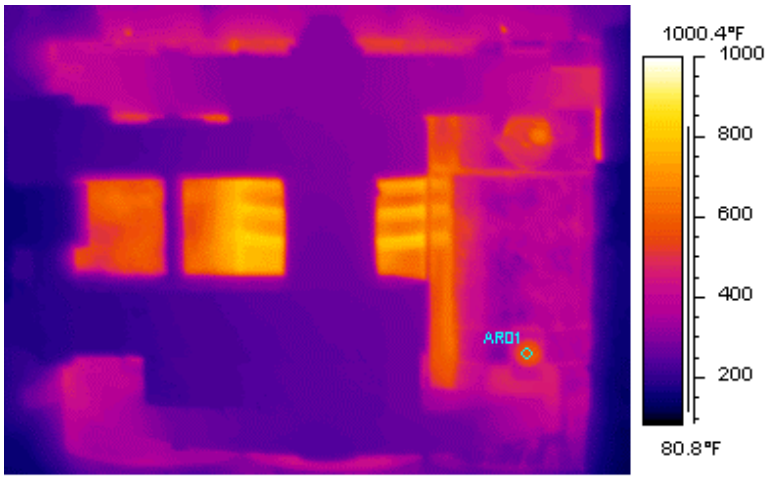

USF Mold, 60 degreess less cooling
574 degrees F

Figure 9.13 Prototype Mold Surface Image during Tests

المنارة للاستشارات
www.manaraa.com

9.4 Conclusions

- Current data indicate that the prototype molds have been successful in providing substantial improvements in mold cooling rates for the side portions.
- In each of the bottle lean plots it is observed that an increased proportion of the lean has shifted toward the base of the bottle. This resulted due to the fact that the base of the mold was left unaltered in this new design and hence, was unable to provide sufficient cooling with reduced cooling times.

المنارة للاستشارات
www.manaraa.com

CHAPTER 10

CONCLUSIONS AND RECOMMENDATIONS

10.1 Conclusions

- Increasing the surface area for convection increases the overall energy transfer by over 35.3%.
- The increase in heat transfer rates increases the temperature of air flowing through the cooling passages.
- Pressure loss in the air cooling passage due to a drop in the density of air which is now at a higher temperature, restricting the air flow.
- The reduction in air flow is 7% hence the existing air blowers shall be capable of handling the new cooling system without any trouble.
- The temperature distribution obtained by ANSYS analysis and the actual experimental results generally indicates similar tends. Exact comparisons of result are hampered by uncertainties in the emissivity of the finished glass and molds. This leads to uncertainties when converting measured radiant fluxes into equivalent temperatures, hampering efforts to make direct temperature comparisons.

المنارة للاستشارات
www.manaraa.com

10.2 Recommendations

As a recommendation for future analysis a 3D model with air flow should be developed to get a better understanding of the actual process. Finer mesh should be applied in the ANSYS finite element analysis. The present work was done on ANSYS Research version, having a limited number of nodes and elements', hence developing a finer mesh for the analysis was not possible. For future work it is hence recommended to use the full version of ANSYS which would greatly eliminate the difficulties encountered in meshing the complex geometry with the current version, hence leading to more accurate results. The analysis in this thesis is a basic step in this complex finite element analysis. The temperature distribution data calculated are estimates due to software limitation. When the problem is analyzed in the full version of ANSYS, a more accurate data will be collected and deeper understanding of the temperature distribution will be possible.

Furthermore, due to software limitations it was not possible to simulate the actual process as it takes place. In this analysis only the thermal part was solved, the flow was not take into consideration. A more accurate analysis can be done with the full version leading to simulations more close to the real life problem.

The analysis is hampered by ill defined initial condition for the glass coming into the mold. We know the starting temperature of glass leaving the furnace, but the cooling process which occurs as the glass gob is transported to the parison mold is not well defined. Additional cooling occurs as the gob enters the parison mold and begins to conform to its new shape. The plunger which performs the internal cavity and the top finish mold also provide a poorly defined temperature transient. After the gob comes in

المنارة للاستشارات
www.manaraa.com

contact with the plunger in the parison mold the temperature of glass is no longer uniform. The glass also undergoes some extra cooling while it is transferred from the parison mold to the final mold which is not accounted for, it is hence suggested that a detailed analysis should be done with all these factors in mind. The temperature of the glass can also be reduced by bringing in the plunger at a lower temperature causing the glass parison temperature to drop. This aspect should be addressed in further analysis.

In this case we have studied the straight fin for enhancement of cooling other configurations of cooling should also be studied for further analysis. The analysis should go beyond the point where the bottle comes out of the mold. Once the bottle is out of the mold it has a large temperature gradient initiating a reheating phenomenon which weakens the bottle causing undesirable shape changes which are not accounted for in the current analysis. Hence, the bottle should be analyzed for further temperature distributions after coming out of the mold.

It is also not certain at this point if we are at the optimum temperature in between the two molding operations and the possibility of cooling of the glass as it transfers between the two molds should be analyzed.

المنارة للاستشارات
www.manaraa.com

REFERENCES

1. A.E. Kurtz , “Apparatus for Uniform Cooling Of Glass-Molding Machines”, US Patent 3536469, 1967

2. John K Martin, “Method for Blow Molding and Cooling Hollow Glassware”, US Patent 4339258, 1979

3. Constantine W. Kulig, “Mold Cooling Arrangement for Use in Glassware Forming Machine”, EP 0242197, 1986

4. Roger Erb and Robert Johnson , “Mold Cooling Arrangement for Use in Forming Machine”, US Patent 4983203, 1990

5. Thomas V. Foster , “Method of Cooling a Mold”, CA 1212234, 1982

6. Thomas V. Foster , “Mold Cooling Arrangement for a Glassware Forming Machine”, US Patent 4502879, 1984

7. Thomas V. Foster, “Mold Portion with Cooling Means for Use in Molding Molten Glass”, US Patent 4657574, 1986

8. Rolando Cantu-Garcia , “System and Method for the Cooling of Hot Molds”, US Patent 4668269,1986

9. Dan Haynes , “Molds Mold Assembly for the Glass Articles”, EP 0819654, 1997

10. Stanley Peter Jones, “ Cooling Arrangement for Mold of a Glassware Forming Machine of the Individual Section Type”, EP 0153801,1985

11. Richard T Kirkman , “Mold Cooling Apparatus for a Glassware Forming Machine”, EP 0612699, 1994

12. Charles Trevor Lawrence , “Apparatus and Method for Cooling a Mold”, EP 0576745, 1992

13. Millard Jones , “Fluid Cooling Of Glass Molds”, US Patent 4142884, 1977

المنارة للاستشارات
www.manaraa.com

14. Julius J Torok , “Mold with Exterior Heat Conducting Elements”, US Patent 4313751, 1981

15. Richard Alan Letellier , “Blow Mold Cooling”, EP 0121346, 1984

16. Stanley Jones, “Cooling Molds Used in Forming Glassware Containers”, 1982

17. Stanley Peter Jones , “Mold Cooling”, GB 2315746, 1986

18. Guillermo Cavazos and M. De Cervantes “Method and Apparatus for Mold Cooling”, US Patent 4824461,1988

19. Alfredo Martinez-Soto, “ Mold Cooling System for the Manufacture of Glass Articles or Similar Materials”, US Patent 4940480, 1989

20. Hanns Stinnes and Martin Strasse, “Glass Forming Mold”, US Patent 3224860, 1962

21. Stanley P. Jones, “Controlling the Temperature of a Glass Mold”, US Patent 4519827, 1984

22. Stanley P. Jones, “Controlling the Temperature of a “Mold”, EP 0121335, 1984

23. Frank A. Fenton, “Mold Arrangement for a Cyclically Operating Glassware Container Manufacturing Machine with Temperature Sensing Means”, US Patent 4526604, 1984

24. Hermann Heinrich Nabelung , “Cooling Articles of Newly Molded Glassware”, EP 0149890, 1984

25. Wilbur Orland Doud, “Glassware Molding Machine with Unitary Axis Molding”, US Patent 468050, 1987

26. Robert S. Johnson & Robert D. Hall, “Glass Container Forming Machine Including Neck Ring Mold Cooling”, US Patent 5358542, 1992

27. John E. Cook, “Apparatus for Forming Glass Articles With Treating Mean”, US Patent 3445219, 1965

28. Kays, W.M and London, A.L, “Compact Heat Exchangers. New York: McGraw Hill, 1997

29. Incropera, F.P., and Dewitt, D.P., “Introduction to Heat Transfer”. New York: John Wiley, 1996

المنارة للاستشارات
www.manaraa.com